MONTCLAIR STATE UNIVERSITY:
VILLAGE AT LITTLE FALLS WILLIAMS HALL KITCHEN RENOVATIONS
45 CLOVE ROAD,
LITTLE FALLS, NEW JERSEY, 07424

GENERAL CONDITIONS

FIELD CONDITIONS:
CONTRACTOR SHALL VERIFY ALL CONDITIONS, AS WELL AS ALL DIMENSIONS & CONDITIONS INDICATED ON THE DRAWINGS, PRIOR TO ACTUAL CONSTRUCTION. ANY VARIATION FROM CONDITIONS INDICATED ON THE DRAWINGS SHALL BE BROUGHT TO THE ATTENTION OF THE ARCHITECT & OWNER'S REPRESENTATIVE PRIOR TO COMMENCING WORK.

COORDINATION OF WORK:
THE CHARACTER & SCOPE OF WORK ARE ILLUSTRATED BY THE WORKING DRAWINGS. CONTRACTOR SHALL CAREFULLY EXAMINE ALL THE DRAWINGS & SHALL BE RESPONSIBLE FOR THE PROPER INSTALLATION OF THE WORK & PROPER CONSIDERATION FOR THE WORK OF OTHERS AND EXISTING BUILDING CONSTRUCTION. DO NOT PLACE DUCTS, PIPING, CONDUIT, OR ANY OBSTRUCTION SO AS TO IMPAIR REQUIRED CEILING HEIGHT AND CLEARANCE FOR THE PROTECTION OF EXISTING ADJACENT SPACES AND BUILDING FACILITIES.

BUILDING CODES & REGULATIONS:
ALL WORK SHALL CONFORM TO ALL GOVERNING CODES & REGULATIONS. CONTRACTOR SHALL FILE & OBTAIN ALL REQUIRED PERMITS TO PERFORM THE WORK. OWNER PAYS PERMIT FEES. UPON COMPLETION OF THE WORK, CONTRACTOR SHALL OBTAIN ALL REQUIRED APPROVALS FROM GOVERNMENTAL AGENCIES INVOLVED PRIOR TO FINAL PAYMENT.

INSURANCE:
THE GENERAL CONTRACTOR SHALL FURNISH ADEQUATE LIABILITY INSURANCE AND BONDING AS REQUIRED BY THE OWNER AND MUNICIPAL REGULATIONS SPECIFICATIONS AND GENERAL CONDITIONS.

LIEN WAIVERS & SWORN AFFIDAVITS:
CONTRACTOR SHALL FURNISH TO OWNER WITHIN 30 DAYS AFTER FINAL COMPLETION, AND AS CONDITION FOR FINAL PAYMENT, FINAL WAIVERS OF LIEN FOR ALL WORK PERFORMED & FROM ALL SUBCONTRACTORS & MAJOR SUPPLIERS

QUALITY STANDARDS:
ALL SUCH WORK SHALL BE PERFORMED IN A FIRST CLASS WORKMANLIKE MANNER & SHALL BE IN GOOD & USABLE CONDITION AT THE DATE OF COMPLETION THEREOF. CONTRACTOR SHALL GUARANTEE ALL WORK PERFORMED TO BE FREE FROM ANY & ALL DEFECTS IN WORKMANSHIP & MATERIALS FOR ONE (1) YEAR FROM DATE ACCEPTANCE HAS BEEN CONFIRMED IN WRITING BY THE OWNER REPRESENTATIVE. CONTRACTOR SHALL BE RESPONSIBLE FOR THE REPLACEMENT OR REPAIR WITHOUT ANY ADDITIONAL CHARGE FOR ANY & ALL WORK DONE OR FURNISHED WHICH SHALL BECOME DEFECTIVE WITHIN THIS ONE (1) YEAR PERIOD. THE CORRECTION OF SUCH WORK SHALL INCLUDE, WITHOUT ADDITIONAL CHARGE, ALL EXPENSES & DAMAGES IN CONNECTION WITH SUCH REMOVAL, REPLACEMENT, OR REPAIR OF ANY PART OF THE WORK WHICH MAY BE DAMAGED OR DISTURBED HEREBY.

ALL WARRANTIES OR GUARANTEES AS TO MATERIALS OR WORKMANSHIP ON OR WITH RESPECT TO THE OWNER'S WORK SHALL BE SO WRITTEN THAT SUCH GUARANTEE OR WARRANTEES SHALL INSURE TO THE BENEFIT OF OWNER.

RUBBER WHEEL CARTS:
CONTRACTOR CARTS, EQUIPMENT BOXES, ETC. MUST BE EQUIPPED WITH RUBBER WHEELS.

RUBBISH REMOVAL:
CONTRACTOR SHALL PROVIDE TEMPORARY BARRICADES AS REQUIRED BY LOCAL CODE OR OWNER, TO PROTECT THE PUBLIC AT ALL TIMES DURING CONSTRUCTION

SUPPLEMENTARY CONDITIONS:
DURING THE CONSTRUCTION PROCESS, THE CONTRACTOR SHOULD BY MEANS OF BARRIERS, GUARDS, FIRE WATCHES, TARPAULINS AND/OR ANY OTHER PROTECTIVE DEVICE AS DIRECTED BY CITY OR TOWN BUILDING DEPARTMENT, TO PROTECT: THE PUBLIC, AND ANY OTHER PERSONS OR ITEM OF MATERIAL VALUE WHICH MAY BE SUBJECT TO DANGER OR DAMAGE IN ANY WAY AS A RESULT OF THIS CONSTRUCTION.

SHOULD ANY OF THE LIFE SAFETY SYSTEMS ON SITE (INCLUDING BUT NOT LIMITED TO, a) SMOKE DETECTOR SYSTEMS, b) SPRINKLER SYSTEMS, c) FIRE ALARM SYSTEMS, d) EMERGENCY LIGHTING SYSTEMS) BE REQUIRED TO BE SHUT DOWN AS A RESULT OF THIS CONSTRUCTION, CONTRACTOR SHALL ADVISE THE BUILDING MANAGEMENT, OWNER, THE BUILDING DEPARTMENT, FIRE DEPARTMENT OR ANY OTHER AGENCY HAVING JURISDICTION, OF THE ANTICIPATED SHUT DOWN & TAKE ALL PRECAUTIONS REQUIRED TO PROTECT THE PREVIOUSLY MENTIONED PERSONS AND/OR ITEMS IN ACCORDANCE WITH BUT NOT LIMITED TO THE REQUIREMENTS OF THE VARIOUS AGENCIES AND LOCAL CODES HAVING JURISDICTION. THESE PROTECTIVE MEASURES SHALL INCLUDE BUT NOT BE LIMITED TO THE FOLLOWING: A) WORKING ON AN OVERTIME BASIS, B) INSTALLING BARRICADES TO LIMIT ACCESS, C) THE USE OF GUARDS OR ANY FIRE WATCHES, D) TEMPORARILY SHUTTING DOWN THE PREMISES, E) ANY OTHER PROTECTIVE MEASURES REQUIRED TO INSURE SAFETY.

GENERAL NOTES

1. ALL WORK PERFORMED BY THE GENERAL CONTRACTOR SHALL CONFORM TO THE REQUIREMENTS OF LOCAL, MUNICIPAL, STATE, AND FEDERAL LAWS, AS WELL AS ANY OTHER GOVERNING AGENCIES, WHETHER OR NOT SPECIFIED ON THE DRAWINGS.

2. THE GENERAL CONTRACTOR SHALL APPLY FOR & OBTAIN ALL LEGAL REQUIRED APPROVALS & PERMITS NECESSARY FOR THE EXECUTION & COMPLETION OF ALL THEIR WORK.

3. EACH SUB-CONTRACTOR SHALL CHECK AND VERIFY ALL DIMENSIONS & CONDITIONS ON THE JOB SITE & SHALL NOTIFY THE ARCHITECT OR LANDLORD OF ANY DISCREPANCIES BETWEEN THE DRAWINGS, NOTES, & FIELD CONDITIONS BEFORE COMMENCING ANY WORK.

4. BEFORE SUBMITTING A PROPOSAL, THE GENERAL CONTRACTOR SHALL VISIT THE PREMISES, FAMILIARIZE THEMSELVES WITH EXISTING CONDITIONS & SATISFY THEMSELVES AS TO THE NATURE & SCOPE OF THE WORK & THE DIFFICULTIES THAT ATTEND TO ITS EXECUTION.

5. THE GENERAL CONTRACTOR SHALL REMOVE ALL RUBBISH & WASTE MATERIALS TO CONTRACTOR SUPPLIED DUMPSTERS, BOTH FROM THEIR OWN & ALL OTHER SUB-CONTRACTORS EMPLOYEES INCLUDING THE RUBBISH THAT IS A BY-PRODUCT OF CARPET, CABINET & TELECOMMUNICATIONS INSULATION ETC.

6. THE GENERAL CONTRACTOR SHALL PROVIDE & INSTALL FIRE EXITING AS REQUIRED BY THE OCCUPATIONAL SAFETY & HEALTH ACT (OSHA) & BY FIRE DEPARTMENT REGULATIONS. THE GENERAL CONTRACTOR SHALL PROVIDE ANY ADDITIONAL (BATTERY OPERATED) EMERGENCY LIGHTING FIXTURES & EXIT SIGNS REQUIRED DUE TO CHANGE IN LAYOUT, OR AS REQUIRED BY THE LOCAL BUILDING DEPARTMENT.

7. ALL LOCK SETS SHALL BE CODED AND/OR KEYED IN ACCORDANCE WITH THE BUILDING REQUIREMENTS. CODES AND/OR KEYS ARE TO BE DELIVERED TO THE TENANT PROPERLY TESTED AND/OR TAGGED. PROVIDE THREE (3) PASS KEYS FOR EACH LOCK.

8. CONTRACTOR SHALL PATCH ALL CUTTING BY MECHANICAL AND ELECTRICAL TRADES AND ALL ADDITIONAL CUTTING BY OTHERS. MATCH ADJACENT MATERIALS AND FINISHES.

9. THE GENERAL CONTRACTOR SHALL FURNISH AND INSTALL ALL ANGLES, STRUTS, BRACKETS, WALL BLOCKING, TOGGLES, EYE BOLTS, ETC. WHEREVER NECESSARY TO PROPERLY SUPPORT, BRACE, OR REINFORCE ALL FINISHES, FRAMES,EQUIPMENT, ETC.

10. ALL PIPE SPACES AND DUCT SPACES SHALL BE ENCLOSED AND FIRE STOPPED BY A PARTITION OF THE REQUIRED RATING.

11. ALL ELECTRICAL OUTLETS, PLUMBING FIXTURES, PLUMBING AND HVAC PIPING, DUCTWORK, REGISTERS, AND GRILLES SHOWN ON THE ARCHITECTURAL DRAWINGS ARE INDICATED TO SET THE GENERAL LOCATION FOR SUCH COMPONENTS ONLY.

12. THE GENERAL CONTRACTOR SHALL FURNISH AND INSTALL ENCLOSURES NECESSARY TO FURR IN PIPES AND CHASES OR TO CONTINUE THE NORMAL LINE OF WALLS AND PARTITIONS.

13. PARTITIONS SHALL BE CONTINUOUS OVER ALL BUILT-IN EQUIPMENT WHERE SHOWN ON PLANS AND DETAILS. FURNISH NECESSARY ANGLES, HANGERS, ETC. TO CARRY THESE PARTITIONS.

14. ALL NEW PIPING AND ELECTRICAL CONDUITS SHALL BE CONCEALED WITHIN NEW PARTITIONS, UNLESS OTHERWISE NOTED.

15. ALL OPENINGS IN MASONRY WALLS, IF ANY, SHALL BE SUPPORTED BY PAINTED STEEL ANGLE LINTELS.

16. GENERAL CONTRACTOR TO TAKE ALL NECESSARY MEASURES TO PREVENT DAMAGE TO ANY ADJACENT PROPERTY OR PERSONS.

17. CONTRACTOR TO INSTALL FIRE RATED DRYWALL OVER EXPOSED STEEL STRUCTURE ON EXTERIOR WALL. FIRE RATING TO MEET CODE REQUIREMENTS.

18. NO SUBSTITUTIONS WILL BE ALLOWED UNLESS SUBMITTED IN WRITING TO THE ARCHITECT OR LANDLORD.

19. THE GENERAL CONTRACTOR SHALL PROVIDE SUBMITTALS FOR EACH ELEMENT OF MATERIALS AND PRODUCTS USED FOR GENERAL CONSTRUCTION, MEP EQUIPMENT AND DEVICES, AND STRUCTURAL WORK AS PER THE SCOPE OF WORK OUTLINED IN THE CONTRACT DRAWINGS. SUBMITTALS INCLUDE PRODUCT DATA AND SAMPLES WHERE APPLICABLE. PRODUCT DATA INCLUDES, AMONG OTHER INFORMATION, PRINTED INFORMATION SUCH AS MANUFACTURER'S INSTALLATION INSTRUCTIONS, CATALOG CUTS, STANDARD COLOR CHARTS, ROUGHING-IN DIAGRAMS AND TEMPLATES, STANDARD WIRING DIAGRAMS AND PERFORMANCE CURVES. THE CONTRACTOR SHALL SUBMIT SIX (6) COPIES OF ALL PRODUCT DATA. SAMPLES TO BE PROVIDED FOR COLOR VERIFICATION. SUBMIT FULL-SIZE UNITS WHERE POSSIBLE, OR A MINIMUM SIZE OF 6"X6" FOR PARTIAL SECTIONS OR SWATCHES OF MATERIALS. THE CONTRACTOR SHALL SUBMIT THREE (3) COPIES OF ALL SAMPLES.

20. THE GENERAL CONTRACTOR IS TO NOTIFY THE ARCHITECT IN WRITING OF ANY ADAPTATIONS TO THESE DRAWINGS OR SPECIFICATIONS REQUIRED BY LOCAL LIFE & SAFETY CODES OR ANY OTHER GOVERNMENT AGENCY.

21. ALL NEW WORK SHALL CONFORM TO THE AMERICANS WITH DISABILITIES ACT (ADA), AND APPLICABLE STATUTES.

22. ALL CONSTRUCTION & SUB-CONTRACTED WORK IS TO BE PERFORMED BY CONTRACTORS LICENSED IN THE STATE WHERE THE WORK IS BEING DONE.

23. CONTRACTOR TO CONFORM WITH LANDLORD & BUILDING OWNER'S DELIVERY & PARKING RULES & REGULATIONS.

24. CONTRACTOR TO CONFORM WITH LANDLORD & BUILDING OWNER'S BUILDING PROTECTION FOR DELIVERY TO THE SITE & STORAGE OF ALL CONSTRUCTION MATERIALS.

25. CONTRACTOR SHALL FOLLOW FACILITIES STANDARD INFECTION CONTROL PROCEDURES.

CODES, REGULATIONS, AND PROJECT DATA

APPLICABLE CODES:

ALL WORK SHALL CONFORM TO:

BUILDING SUBCODE	INTERNATIONAL BUILDING CODE 2021 (NJ EDITION)	NJAC 5:23-3.14
	INTERNATIONAL FIRE CODE 2021	
REHABILITATION SUBCODE	NJUCC, SUBCHAPTER 6	NJAC 5:23-6
BARRIER FREE SUBCODE	NJ IBC CHAPTER 11, NJAC 5:23-7, ICC / ANSI A117.1-2017	NJAC 5:23-7
PLUMBING SUBCODE	NATIONAL STANDARD PLUMBING CODE 2021	NJAC 5:23-3.15
ELECTRICAL SUBCODE	NATIONAL ELECTRICAL CODE (NFPA 70) / 2020	NJAC 5:23-3.16
ENERGY SUBCODE	ASHRAE 90.1 - 2021	NJAC 5:23-3.18
MECHANICAL SUBCODE	INTERNATIONAL MECHANICAL CODE 2021	NJAC 5:23-3.20
FUEL GAS SUBCODE	INTERNATIONAL FUEL GAS CODE 2021	NJAC 5:23-3.22

PROPERTY INFORMATION:

BUILDING LOCATION: THE VILLAGE AT LITTLE FALLS MONTCLAIR STATE UNIVERSITY:WILLIAMS HALL
45 CLOVE ROAD,
LITTLE FALLS, NJ 07424

AREA OF WORK = APROXIMATELY 3,760 SF

SCHEDULE NOTE

PROPOSED CONSTRUCTION SCHEDULE:

CONSTRUCTION SEQUENCE WILL BE ONE RESIDENCE AT A TIME EACH SUBSEQUENT SUMMER - STARTING 2026 AND OVERALL COMPLETION AUGUST 2029.

THE BASE BID WILL BE FOR FENWICK HALL - SUMMER 2026
ADD ALTERNATE 1- WILLIAMS HALL - SUMMER 2027
ADD ALTERNATE 2- COUNT BASIE HALL - SUMMER 2028
ADD ALTERNATE 3- ALICE PAUL HALL - SUMMER 2029

FOR THE FIRST BUILDING, MOBILIZATION IS EXPECTED EARLY MAY 2026, WITH SUBSTANTIAL COMPLETION BY JULY 31, 2026. DEMOBILIZATION REQUIRED BY AUGUST 7, 2026. ALL WORK IS TO BE COMPLETED DURING THE SAME TIME FRAME IN EACH SUBSEQUENT YEAR.

BY SUBMITTING THIS BID, THE BIDDER HAS REVIEWED THE SCHEDULE AND ACKNOWLEDGES THE SCHEDULE AND MILESTONES INDICATED AND HAS INCLUDED CONSIDERATION TO COMPLETE THE WORK WITHIN THE SCHEDULE REQUIRED.

SCOPE OF WORK

THIS PROJECT IS A RENOVATION OF KITCHENS & FLOORING IN ALL BUT 6 EXISTING UNITS WITHIN WILLIAMS HALL, ONE OF 4 APARTMENT BUILDINGS WITHIN MONTCLAIR STATE UNIVERSITY'S "THE VILLAGE" APARTMENT-STYLE COMPLEX.

THE UNITS OUT OF SCOPE (3D, 3K, 5A, 5B, 5C & 5K) WERE PREVIOUSLY RENOVATED.

NEW CABINETS, APPLIANCES & FIXTURES ARE PROPOSED. EXISTING PLUMBING & POWER LOCATIONS WILL BE MAINTAINED. FLOORING WILL BE REPLACED IN THE ENTIRETY OF THE KITCHEN/LIVING SPACE.

THE BUILDING HAS APPROXIMATELY 53 UNITS, 20% OF WHICH ARE ALREADY FULLY ADA ACCESSIBLE OR ADA ADAPTABLE. THIS PROJECT DOES NOT ADD ADDITIONAL ACCESSIBLE UNITS TO THE BUILDING, HOWEVER MOST OF THE PROPOSED FIXTURES WERE SELECTED TO ALLOW FOR EASE OF FUTURE ADA ADAPTATION IF DEEMED NECESSARY BY THE UNIVERSITY.

DRAWING LIST

DWG.	DRAWING TITLE
GENERAL	
T-001.00	COVER SHEET
T-002.00	ABBREVIATIONS, SYMBOLS, AND ACCESSIBILITY & DEVICE MOUNTING HEIGHTS DETAILS
ARCHITECTURAL	
D-101.00	FIRST FLOOR REMOVALS PLAN
D-102.00	SECOND FLOOR REMOVALS PLAN
D-103.00	THIRD FLOOR REMOVALS PLAN
D-104.00	FOURH FLOOR REMOVALS PLAN
D-105.00	FIFTH FLOOR REMOVALS PLAN
A-101.00	FIRST FLOOR CONSTRUCTION PLAN
A-102.00	SECOND FLOOR CONSTRUCTION PLAN
A-103.00	THIRD FLOOR CONSTRUCTION PLAN
A-104.00	FOURH FLOOR CONSTRUCTION PLAN
A-105.00	FIFTH FLOOR CONSTRUCTION PLAN
A-700.00	ENLARGED TYP. KITCHEN PLANS & ELEVATIONS
A-800.00	TYP. KITCHEN SECTION DETAILS

SITE LOCATION MAP

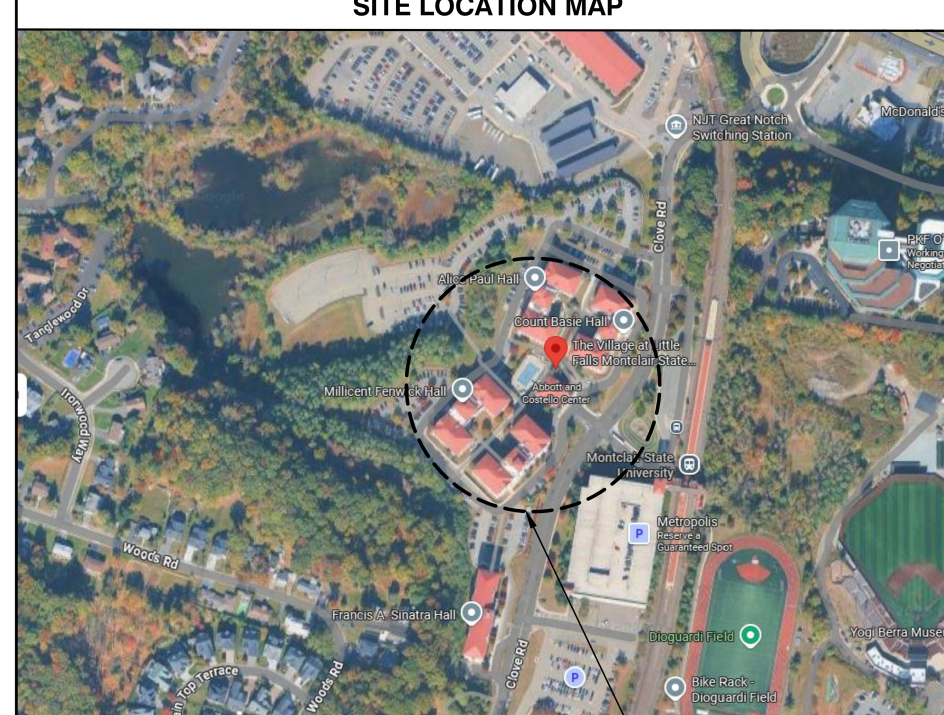

LOCATION OF SITE

KEY PLAN

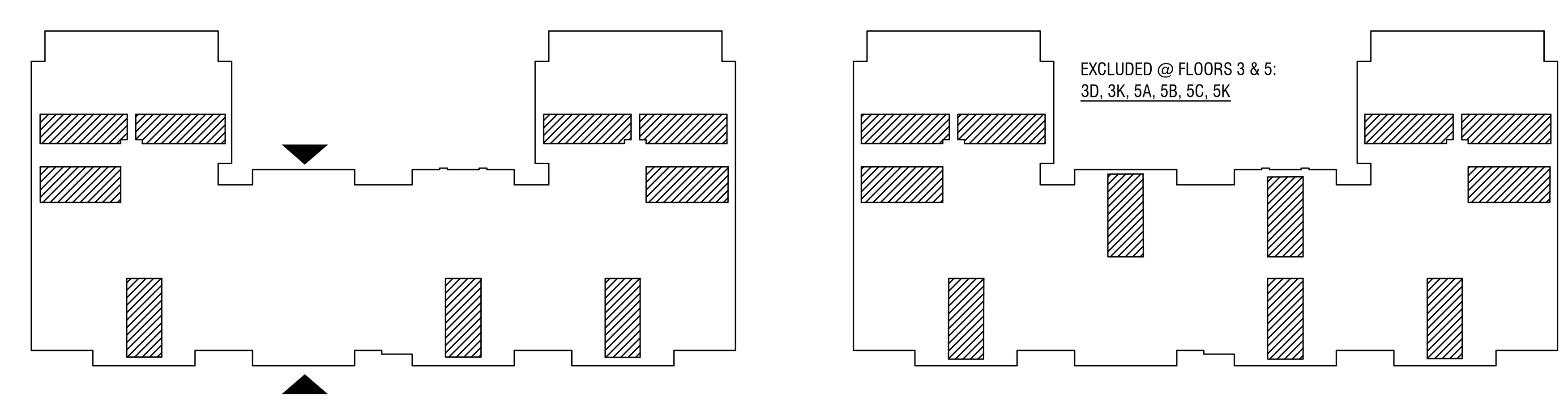

AREA OF WORK

TRUE NORTH
NOTE: N.T.S.

POSEN ARCHITECTS.

POSEN ARCHITECTS, LLC
Architecture • Interiors • Planning • Regulatory Approvals

NJ:
25 Columbia Street
West Orange, NJ 07052
T: 973-325-3250

NY:
222 Mamaroneck Avenue
White Plains, NY 10605
T: 914-935-8820

Posen Architects, LLC
NY Cert. 80883
NJ Cert. 21AC00035700
FL Cert. L21000472677

Dennis A. Posen, AIA
NY Lic. 015026-1
NJ Lic. 21AI00808700
FL Lic. AR101678

Kosta Koulouris, AIA
NY Lic. 034846-1
NJ Lic. 21AI01893200

Thomas A. Fantacone, AIA
NY Lic. 035897-1
NJ Lic. 21AI00792500

William S. Hamilton, AIA
NY Lic. 030718-1
NJ Lic. 21AI01380200

Renata S. Mayhew, AIA
NY Lic. 044597-01

www.posen.com

Copyright © 2025

Issuance / Revision

No.	Date	Description

Client:
MONTCLAIRE STATE UNIVERSITY
45 CLOVE ROAD
LITTLE FALLS, NJ 07424

Project:
THE VILLAGE:
WILLIAMS HALL KITCHEN RENOVATIONS
MSU PROJECT # PR25C020

Seal:

Posen Project No.: 25100
Submission: ISSUED FOR BID
Drawing: COVER SHEET

Drawn By:	Checked By:	Date:
YA	TF	09.16.2025
Scale:	**Dwg No.Issue No.:**	**Drawing:**
1/8" = 1'-0"	T-001.00	1 of 14

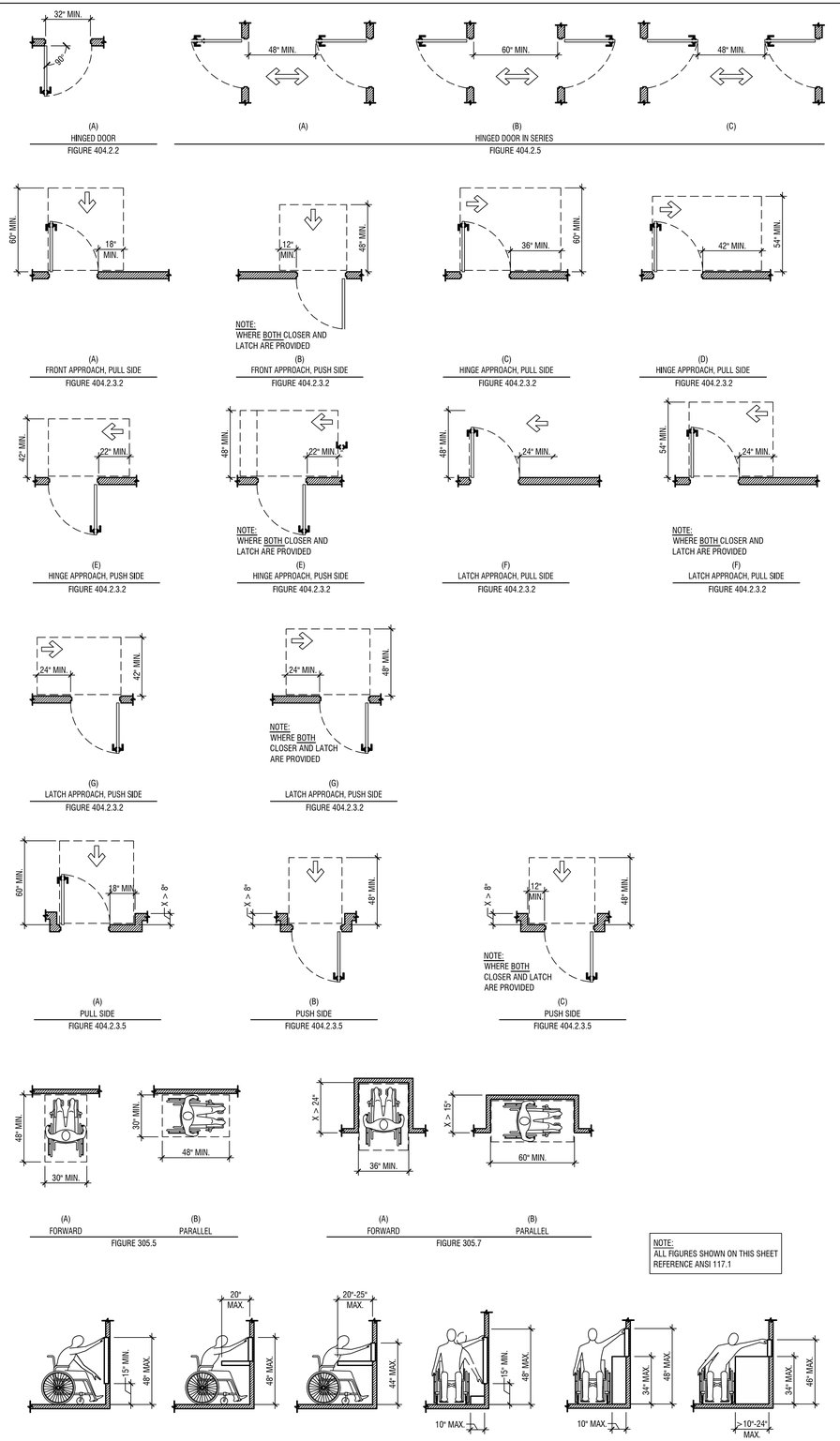

2 TYPICAL ADA CLEARANCE DIAGRAMS

N.T.S.

ARCHITECTURAL ABBREVIATIONS

ABV.	ABOVE
A.F.F.	ABOVE FINISHED FLOOR
ACT	ACOUSTICAL CEILING TILE
A/C	AIR CONDITIONING
ALT.	ALTERNATE
ALUM.	ALUMINUM
A.B.	ANCHOR BOLT
ARCH.	ARCHITECT
@	AT
BITU.	BITUMINOUS
BLK.	BLOCK
BLKG.	BLOCKING
BD.	BOARD
BLDG.	BUILDING
BOT	BOTTOM
B.U.R.	BUILT-UP ROOFING
CAB.	CABINET
C	CARPET
C.B.	CATCH BASIN
CG	CORNER GUARD
CLG.	CEILING
CEM.	CEMENT
CNTR.	CENTER
℄	CENTER LINE
CT	CERAMIC MOSAIC TILE
C.M.U.	CONCRETE MASONRY UNIT
C.R.	CLASSROOM
C.O.	CLEAN CUT
CLOS, CL	CLOSET
COL.	COLUMN
COL. DIM.	COLUMN DIMENSION
COMP. FL.	COMPOSITION FLOORING
CONC.	CONCRETE
CONF.	CONFERENCE
CONT.	CONTINUOUS
C.J.	CONTROL JOINT
CRS.	COURSES
DEPT.	DEPARTMENT
DIM.	DIMENSION
DET., DET'L.	DETAIL
DISP.	DISPENSER
DBL.	DOUBLE
DN.	DOWN
DWG.	DRAWING
DWGS.	DRAWINGS
D.F.	DRINKING FOUNTAIN
D.W.	DRYWALL
EA.	EACH
E.W.C.	ELECTRIC WATER COOLER
EL.	ELEVATION
ELEV.	ELEVATOR
EQ.	EQUAL
EQUIP.	EQUIPMENT
E.F.	EXHAUST FAN
EXIST.	EXISTING
EXP. JT.	EXPANSION JOINT
E.I.F.S.	EXTERIOR INS. FINISHING SYS.
EXTR.	EXTRUDED
FIN.	FINISH
F.B.C.	FIRE BLANKET CAB
F.E.C.	FIRE EXTINGUISHER CAB.
F.H.C.	FIRE HOSE CABINET
FIXT.	FIXTURE
FL.	FLOOR
FD.	FLOOR DRAIN
FOOT'G.	FOOTING
FDN.	FOUNDATION
GALV.	GALVANIZED
GA.	GAUGE
G.C.	GENERAL CONTRACTOR
GL.	GLASS
G.W.B.	GYPSUM WALLBOARD
H.R.	HANDRAIL
HDCP	HANDICAPPED
HTR.	HEATER
HGT	HEIGHT
H.P.	HIGH POINT
H.M.	HOLLOW METAL
H.W.	HOT WATER
HORIZ.	HORIZONTAL
INDIV.	INDIVIDUAL
INSTR.	INSTRUMENT
INSUL/INS.	INSULATION
INTERMED.	INTERMEDIATE
JAN.	JANITOR
JT.	JOINT
JST.	JOIST
LAB.	LABORATORY
LAM.	LAMINATE
LAV.	LAVATORY
LDR.	LEADER
LKR.	LOCKER
L.P.	LOW POINT
MACH.	MACHINE
MFGR.	MANUFACTURER
M.O.	MASONRY OPENING
MAX.	MAXIMUM
MECH.	MECHANICAL
MEP	MECHANICAL, ELECTRICAL & PLUMBING
MHO	MAGNETIC HOLD OPEN
MTL.	METAL
MIN.	MINIMUM
MIR.	MIRROR
MOD.	MODIFIED
MNTG.	MOUNTING
MULL	MULLION
NOM.	NOMINAL
N.I.C.	NOT IN CONTRACT
N.T.S.	NOT TO SCALE
NO.	NUMBER
O.C., O/C	ON CENTER
OHG.	OVERHANG
O.H.	OVERHEAD
PART.	PARTITION
PL., P. LAM	PLASTIC LAMINATE
PLTFM.	PLATFORM
PLYWD.	PLYWOOD
P.C.	PRECAST
PM.F.	PREMOLDED FILLER
PRESS.	PRESSURE
℗	PROPERTY LINE
R.W.L	RAIN WATER LEADS
REC.	RECEPTACLE
REINF.	REINFORCEMENT
REQ.	REQUIRED
R.D.	ROOF DRAIN
RM.	ROOM
R.O.	ROUGH OPENING
SECT.	SECTION
SIM.	SIMILAR
SPEC.	SPECIFICATION
SPEC'D.	SPECIFIED
SS	STAINLESS STEEL
STD.	STANDARD
STL.	STEEL
STOR.	STORAGE
STRUCT.	STRUCTURAL
S.A.T.	SUSP. ACOUSTICAL TILE
TB.	TACK BOARD
TEMP.	TEMPERATURE
TEMP'D.	TEMPERED
TOIL.	TOILET
T.O.M.	TOP OF MASONRY
T.O.S.	TOP OF STEEL
TYP.	TYPICAL
U/S	UNDERSIDE
U.O.N.	UNLESS OTHERWISE NOTED
U.V.	UNIT VENTILATOR
VERT.	VERTICAL
VEST.	VESTIBULE
VCT	VINYL COMPOSITION TILE
W.C.	WATER CLOSETS
W.W.F.	WELDED WIRE FABRIC
WG.	WIRE GLASS
W/	WITH
WD.	WOOD

SYMBOL LEGEND

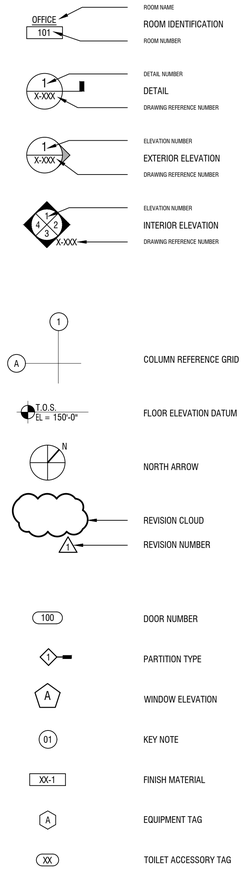

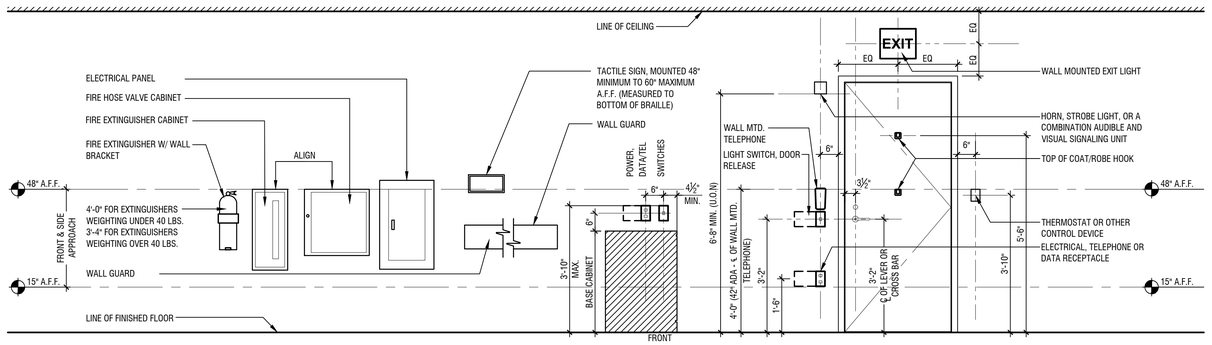

1 TYPICAL MOUNTING HEIGHTS DIAGRAM

N.T.S.

POSEN ARCHITECTS

POSEN ARCHITECTS, LLC

Architecture•Interiors•Planning•Regulatory Approvals

NJ:
25 Columbia Street
West Orange, NJ 07052
T: 973-325-3250

NY:
222 Mamaroneck Avenue
White Plains, NY 10605
T: 914-935-8820

Posen Architects, LLC
NY Cert. 80883
NJ Cert. 21AC00035700
FL Cert. L21000472677

Dennis A. Posen, AIA
NY Lic. 015026-1
NJ Lic. 21AI00808700
FL Lic. AR101678

Kosta Koulouris, AIA
NY Lic. 034846-1
NJ Lic. 21AI01893200

Thomas A. Fantacone, AIA
NY Lic. 035897-1
NJ Lic. 21AI00792500

William S. Hamilton, AIA
NY Lic. 030718-1
NJ Lic. 21AI01380200

Renata S. Mayhew, AIA
NY Lic. 044597-01

www.posen.com

Copyright © 2025

Issuance / Revision

No.	Date	Description

Client:

MONTCLAIRE STATE UNIVERSITY
45 CLOVE ROAD
LITTLE FALLS, NJ 07424

Project:

THE VILLAGE:
WILLIAMS HALL KITCHEN RENOVATIONS
MSU PROJECT # PR25C020

Seal:

Posen Project No.: 25100

Submission: ISSUED FOR BID

Drawing: ABBREVIATIONS, SYMBOLS, AND ACCESSIBILITY & DEVICE MOUNTING HEIGHTS DETAILS

Drawn By:	Checked By:	Date:
YA	TF	09.16.2025
Scale:	**Dwg No.Issue No.:**	**Drawing:**
1/8" = 1'-0"	T-002.00	2 of 14

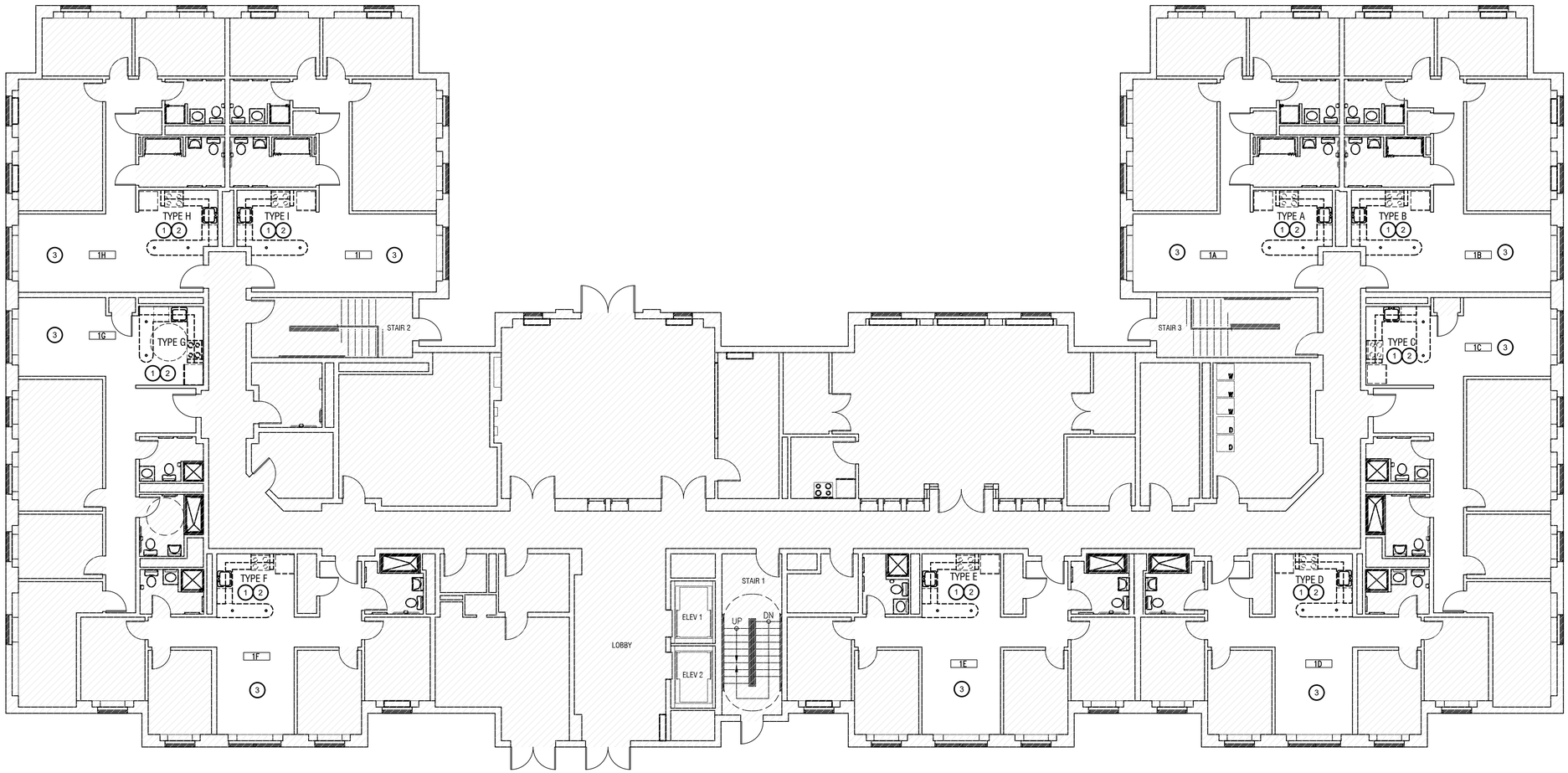

1 FIRST FLOOR PLAN
1/8" = 1'-0"

CONSTRUCTION NOTES

1. ANY APPLIANCES REMAINING ONSITE AT THE START OF CONSTRUCTION SHALL BE REMOVED AND DISPOSED OF BY THE CONTRACTOR.

KEY NOTES

1. REMOVE EXISTING WALL CABINETS & ASSOCIATED COMPONENTS. PATCH ANY DAMAGE TO WALLS CAUSED BY THEIR REMOVAL & PREPARE SURFACES TO RECEIVE NEW MILLWORK.

2. REMOVE EXISTING DISHWASHER AND CAP ASSOCIATED PIPING, DRAIN AND ELECTRIC CONNECTIONS.

3. REMOVE EXISTING FLOOR FINISH, WALL BASE AND ASSOCIATED COMPONENTS IN ENTIRETY OF **KITCHEN/LIVING SPACE**. PATCH AND REPAIR ANY DAMAGE TO WALLS CAUSED BY REMOVAL OF WALL BASE. PREPARE SUBSTRATES TO RECEIVE NEW FLOORING (LVT-01) & RUBBER WALL BASE (RB-01) AS SCHEDULED.

POSEN ARCHITECTS

POSEN ARCHITECTS, LLC
Architecture•Interiors•Planning•Regulatory Approvals

NJ:
25 Columbia Street
West Orange, NJ 07052
T: 973-325-3250

NY:
222 Mamaroneck Avenue
White Plains, NY 10605
T: 914-935-8820

Posen Architects, LLC
NY Cert. 80883
NJ Cert. 21AC00035700
FL Cert. L21000472677

Dennis A. Posen, AIA
NY Lic. 015026-1
NJ Lic. 21AI00808700
FL Lic. AR101678

Kosta Koulouris, AIA
NY Lic. 034846-1
NJ Lic. 21AI01893200

Thomas A. Fantacone, AIA
NY Lic. 035897-1
NJ Lic. 21AI00792500

William S. Hamilton, AIA
NY Lic. 030718-1
NJ Lic. 21AI01380200

Renata S. Mayhew, AIA
NY Lic. 044597-01

www.posen.com
Copyright © 2025

Issuance / Revision

No.	Date	Description

Client:

MONTCLAIRE STATE UNIVERSITY
45 CLOVE ROAD
LITTLE FALLS, NJ 07424

Project:

THE VILLAGE:
WILLIAMS HALL KITCHEN RENOVATIONS
MSU PROJECT # PR25C020

Seal:

Posen Project No.: Z5100

Submission: ISSUED FOR BID

Drawing: FIRST FLOOR REMOVALS PLAN

Drawn By:	Checked By:	Date:
YA	TF	09.16.2025
Scale:	**Dwg No.Issue No.:**	**Drawing:**
1/8" = 1'-0"	D-101.00	3 of 14

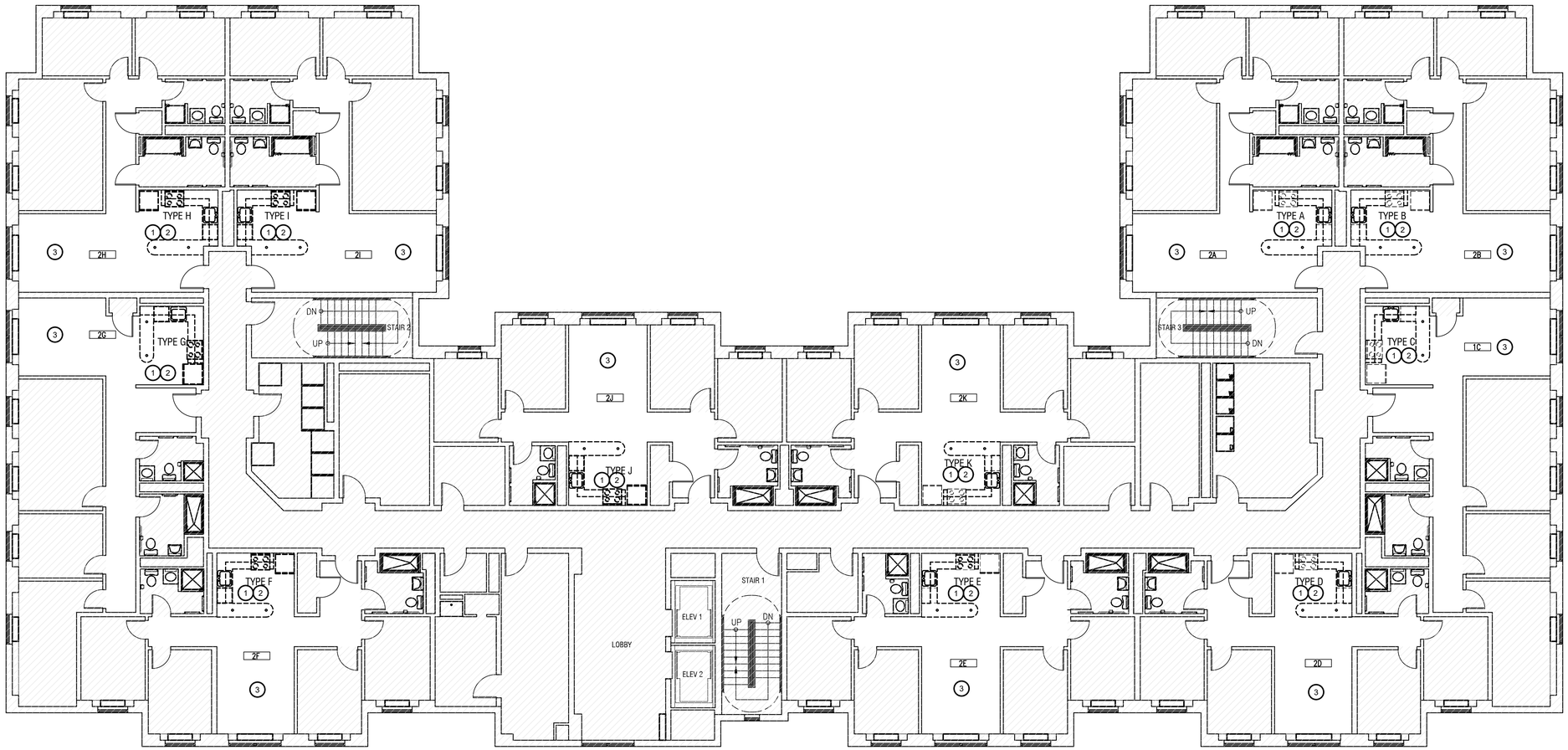

1 SECOND FLOOR
1/8" = 1'

NORTH

CONSTRUCTION NOTES

1. ANY APPLIANCES REMAINING ONSITE AT THE START OF CONSTRUCTION SHALL BE REMOVED AND DISPOSED OF BY THE CONTRACTOR.

KEY NOTES

1. REMOVE EXISTING WALL CABINETS & ASSOCIATED COMPONENTS. PATCH ANY DAMAGE TO WALLS CAUSED BY THEIR REMOVAL & PREPARE SURFACES TO RECEIVE NEW MILLWORK.

2. REMOVE EXISTING DISHWASHER AND CAP ASSOCIATED PIPING, DRAIN AND ELECTRIC CONNECTIONS.

3. REMOVE EXISTING FLOOR FINISH, WALL BASE AND ASSOCIATED COMPONENTS IN ENTIRETY OF **KITCHEN/LIVING SPACE**. PATCH AND REPAIR ANY DAMAGE TO WALLS CAUSED BY REMOVAL OF WALL BASE. PREPARE SUBSTRATES TO RECEIVE NEW FLOORING (LVT-01) & RUBBER WALL BASE (RB-01) AS SCHEDULED.

POSEN ARCHITECTS

POSEN ARCHITECTS, LLC
Architecture•Interiors•Planning•Regulatory Approvals

NJ:
25 Columbia Street
West Orange, NJ 07052
T: 973-325-3250

NY:
222 Mamaroneck Avenue
White Plains, NY 10605
T: 914-935-8820

Posen Architects, LLC
NY Cert. 80883
NJ Cert. 21AC00035700
FL Cert. L21000472677

Dennis A. Posen, AIA
NY Lic. 015026-1
NJ Lic. 21AI00808700
FL Lic. AR101678

Kosta Koulouris, AIA
NY Lic. 034846-1
NJ Lic. 21AI01893200

Thomas A. Fantacone, AIA
NY Lic. 035897-1
NJ Lic. 21AI00792500

William S. Hamilton, AIA
NY Lic. 030718-1
NJ Lic. 21AI01380200

Renata S. Mayhew, AIA
NY Lic. 044597-01

www.posen.com

Copyright © 2025

Issuance / Revision

No.	Date	Description

Client:

MONTCLAIRE STATE UNIVERSITY
45 CLOVE ROAD
LITTLE FALLS, NJ 07424

Project:

THE VILLAGE:
WILLIAMS HALL KITCHEN RENOVATIONS
MSU PROJECT # PR25C020

Seal:

Posen Project No.: 25100

Submission: ISSUED FOR BID

Drawing: SECOND FLOOR REMOVALS PLAN

Drawn By:	Checked By:	Date:
YA	TF	09.16.2025
Scale:	**Dwg No.Issue No.:**	**Drawing:**
1/8" = 1'-0"	D-102.00	4 of 14

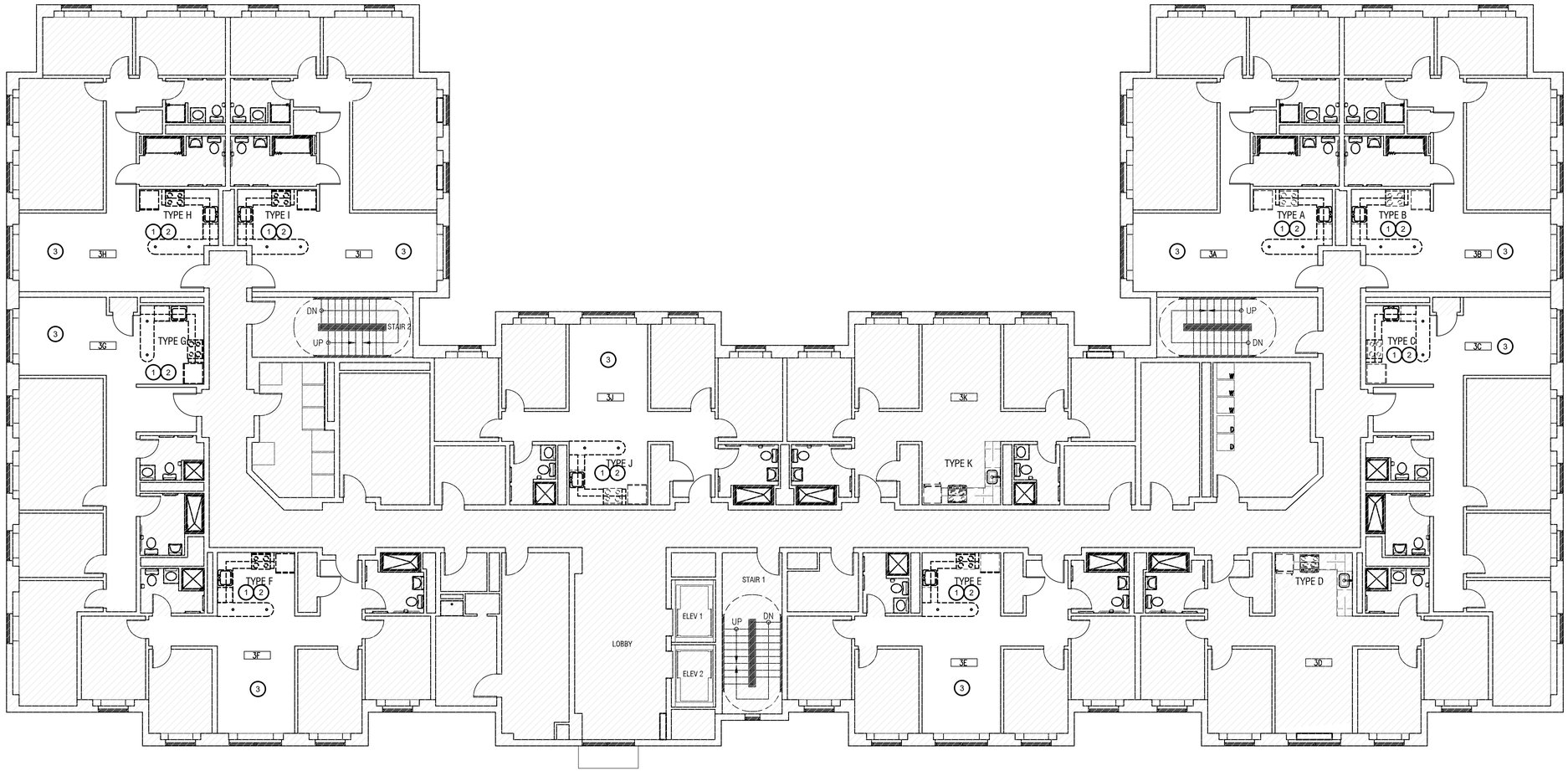

1 THIRD FLOOR PLAN
1/8"= 1'-0"

NORTH

CONSTRUCTION NOTES

1. ANY APPLIANCES REMAINING ONSITE AT THE START OF CONSTRUCTION SHALL BE REMOVED AND DISPOSED OF BY THE CONTRACTOR.

KEY NOTES

1. REMOVE EXISTING WALL CABINETS & ASSOCIATED COMPONENTS. PATCH ANY DAMAGE TO WALLS CAUSED BY THEIR REMOVAL & PREPARE SURFACES TO RECEIVE NEW MILLWORK.

2. REMOVE EXISTING DISHWASHER AND CAP ASSOCIATED PIPING, DRAIN AND ELECTRIC CONNECTIONS.

3. REMOVE EXISTING FLOOR FINISH, WALL BASE AND ASSOCIATED COMPONENTS IN ENTIRETY OF **KITCHEN/LIVING SPACE**. PATCH AND REPAIR ANY DAMAGE TO WALLS CAUSED BY REMOVAL OF WALL BASE. PREPARE SUBSTRATES TO RECEIVE NEW FLOORING (LVT-01) & RUBBER WALL BASE (RB-01) AS SCHEDULED.

POSEN ARCHITECTS

POSEN ARCHITECTS, LLC
Architecture•Interiors•Planning•Regulatory Approvals

NJ:
25 Columbia Street
West Orange, NJ 07052
T: 973-325-3250

NY:
222 Mamaroneck Avenue
White Plains, NY 10605
T: 914-935-8820

Posen Architects, LLC
NY Cert. 80883
NJ Cert. 21AC00035700
FL Cert. L21000472677

Dennis A. Posen, AIA
NY Lic. 015026-1
NJ Lic. 21AI00808700
FL Lic. AR101678

Kosta Koulouris, AIA
NY Lic. 034846-1
NJ Lic. 21AI01893200

Thomas A. Fantacone, AIA
NY Lic. 035897-1
NJ Lic. 21AI00792500

William S. Hamilton, AIA
NY Lic. 030718-1
NJ Lic. 21AI01380200

Renata S. Mayhew, AIA
NY Lic. 044597-01

www.posen.com
Copyright © 2025

Issuance / Revision

No.	Date	Description

Client:

MONTCLAIRE STATE UNIVERSITY
45 CLOVE ROAD
LITTLE FALLS, NJ 07424

Project:

THE VILLAGE:
WILLIAMS HALL KITCHEN RENOVATIONS
MSU PROJECT # PR25C020

Seal:

Posen Project No.: 25100

Submission: ISSUED FOR BID

Drawing: THIRD FLOOR REMOVALS PLAN

Drawn By:	Checked By:	Date:
YA	TF	09.16.2025
Scale:	**Dwg No.Issue No.:**	**Drawing:**
1/8" = 1'-0"	D-103.00	5 of 14

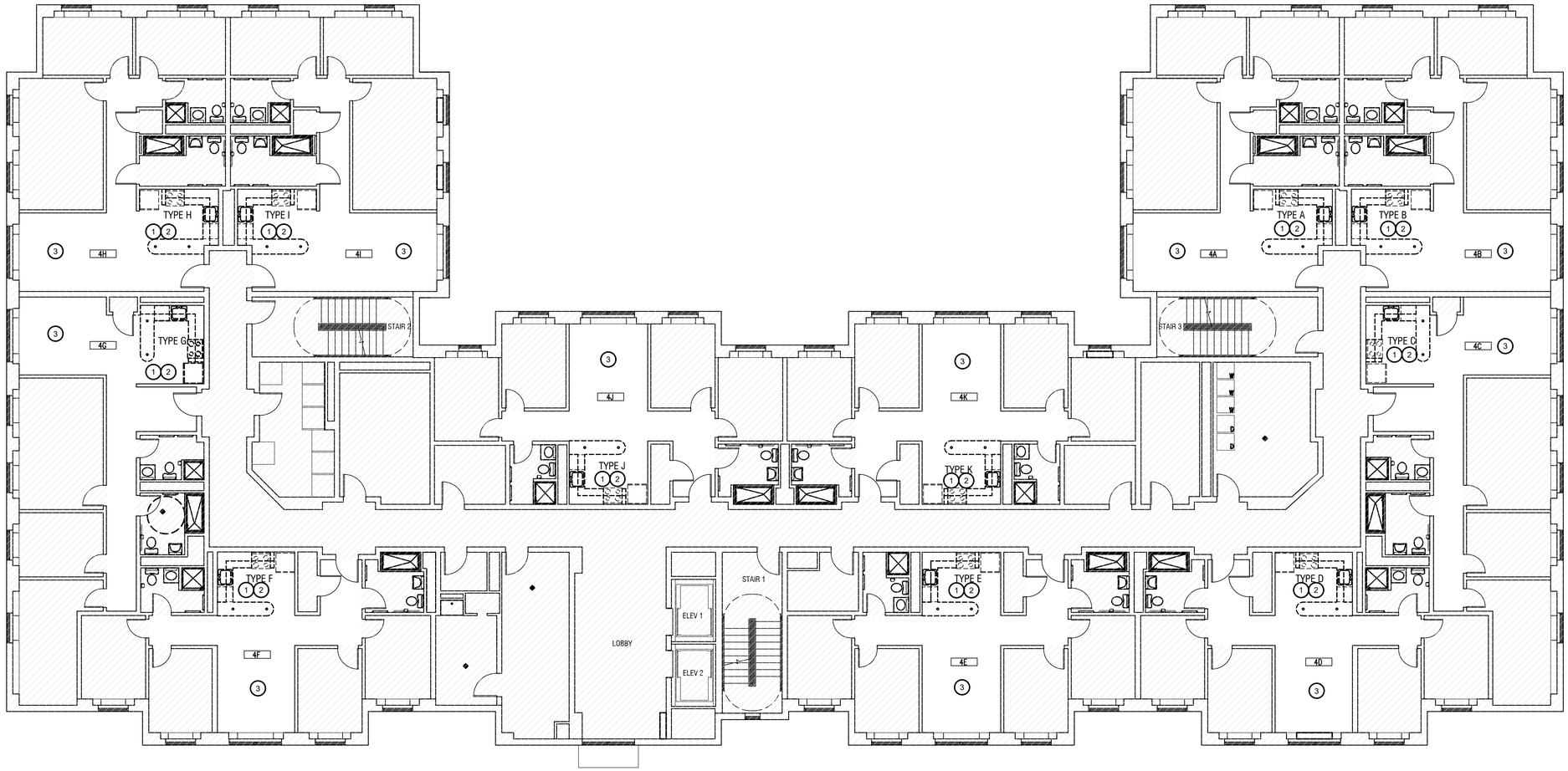

1 FOURTH FLOOR PLAN
1/8" = 1'-0"

CONSTRUCTION NOTES

1. ANY APPLIANCES REMAINING ONSITE AT THE START OF CONSTRUCTION SHALL BE REMOVED AND DISPOSED OF BY THE CONTRACTOR.

KEY NOTES

1. REMOVE EXISTING WALL CABINETS & ASSOCIATED COMPONENTS. PATCH ANY DAMAGE TO WALLS CAUSED BY THEIR REMOVAL & PREPARE SURFACES TO RECEIVE NEW MILLWORK.
2. REMOVE EXISTING DISHWASHER AND CAP ASSOCIATED PIPING, DRAIN AND ELECTRIC CONNECTIONS.
3. REMOVE EXISTING FLOOR FINISH, WALL BASE AND ASSOCIATED COMPONENTS IN ENTIRETY OF **KITCHEN/LIVING SPACE**. PATCH AND REPAIR ANY DAMAGE TO WALLS CAUSED BY REMOVAL OF WALL BASE. PREPARE SUBSTRATES TO RECEIVE NEW FLOORING (LVT-01) & RUBBER WALL BASE (RB-01) AS SCHEDULED.

POSEN ARCHITECTS

POSEN ARCHITECTS, LLC
Architecture•Interiors•Planning•Regulatory Approvals

NJ:
25 Columbia Street
West Orange, NJ 07052
T: 973-325-3250

NY:
222 Mamaroneck Avenue
White Plains, NY 10605
T: 914-935-8820

Posen Architects, LLC
NY Cert. 80883
NJ Cert. 21AC00035700
FL Cert. L21000472677

Dennis A. Posen, AIA
NY Lic. 015026-1
NJ Lic. 21AI00808700
FL Lic. AR101678

Kosta Koulouris, AIA
NY Lic. 034846-1
NJ Lic. 21AI01893200

Thomas A. Fantacone, AIA
NY Lic. 035897-1
NJ Lic. 21AI00792500

William S. Hamilton, AIA
NY Lic. 030718-1
NJ Lic. 21AI01380200

Renata S. Mayhew, AIA
NY Lic. 044597-01

www.posen.com
Copyright © 2025

Issuance / Revision

No.	Date	Description

Client:

MONTCLAIRE STATE UNIVERSITY
45 CLOVE ROAD
LITTLE FALLS, NJ 07424

Project:

THE VILLAGE:
WILLIAMS HALL KITCHEN RENOVATIONS
MSU PROJECT # PR25C020

Seal:

Posen Project No.: Z5100

Submission: ISSUED FOR BID

Drawing: FORTH FLOOR REMOVALS PLAN

Drawn By:	Checked By:	Date:
YA	TF	09.16.2025
Scale:	**Dwg No.Issue No.:**	**Drawing:**
1/8" = 1'-0"	D-104.00	6 of 14

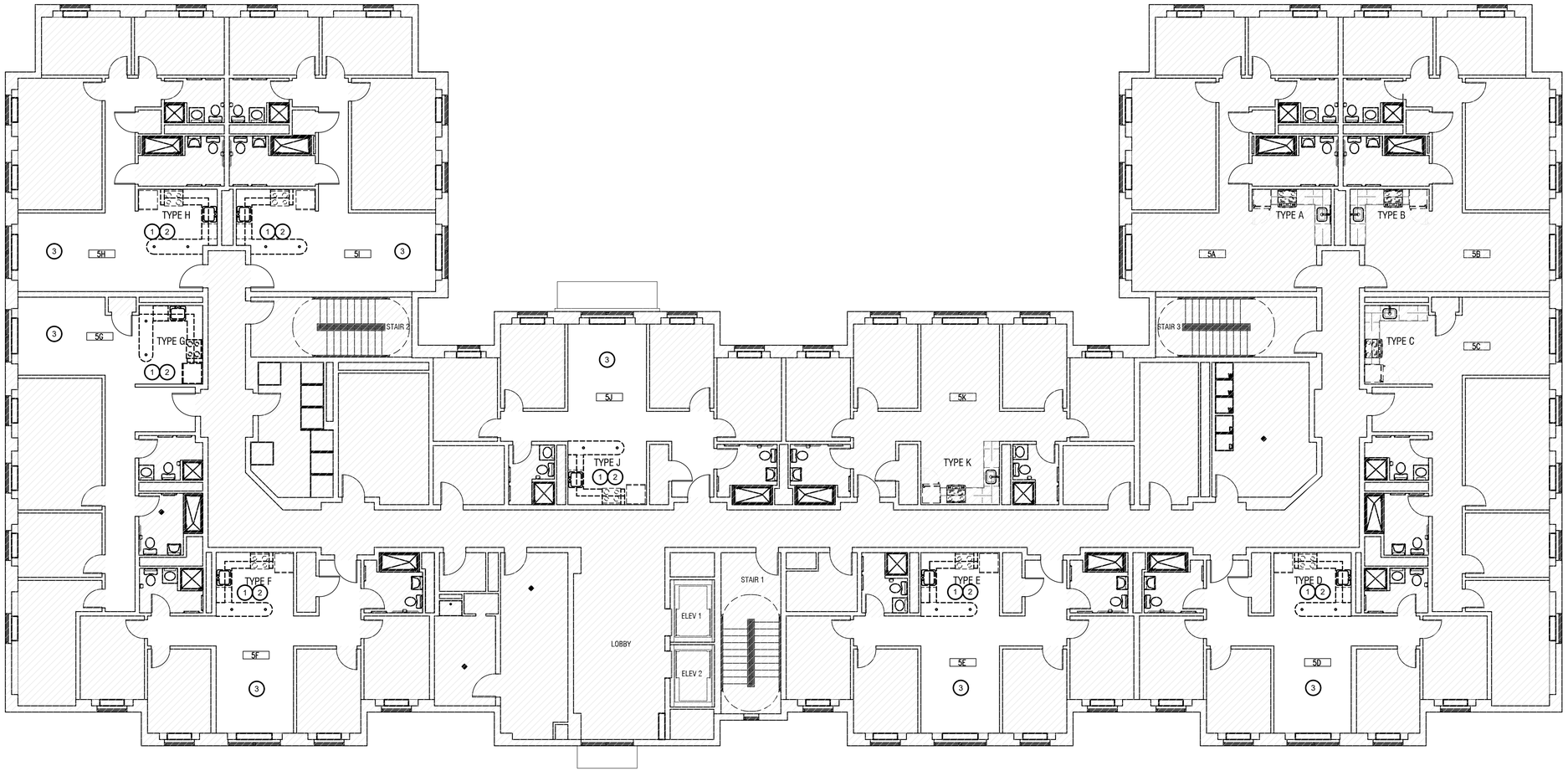

1 FIFTH FLOOR PLAN
1/8" = 1'-0"

NORTH

CONSTRUCTION NOTES

1. ANY APPLIANCES REMAINING ONSITE AT THE START OF CONSTRUCTION SHALL BE REMOVED AND DISPOSED OF BY THE CONTRACTOR.

KEY NOTES

1. REMOVE EXISTING WALL CABINETS & ASSOCIATED COMPONENTS. PATCH ANY DAMAGE TO WALLS CAUSED BY THEIR REMOVAL & PREPARE SURFACES TO RECEIVE NEW MILLWORK.

2. REMOVE EXISTING DISHWASHER AND CAP ASSOCIATED PIPING, DRAIN AND ELECTRIC CONNECTIONS.

3. REMOVE EXISTING FLOOR FINISH, WALL BASE AND ASSOCIATED COMPONENTS IN ENTIRETY OF **KITCHEN/LIVING SPACE**. PATCH AND REPAIR ANY DAMAGE TO WALLS CAUSED BY REMOVAL OF WALL BASE. PREPARE SUBSTRATES TO RECEIVE NEW FLOORING (LVT-01) & RUBBER WALL BASE (RB-01) AS SCHEDULED.

POSEN ARCHITECTS

POSEN ARCHITECTS, LLC
Architecture•Interiors•Planning•Regulatory Approvals

NJ:
25 Columbia Street
West Orange, NJ 07052
T: 973-325-3250

NY:
222 Mamaroneck Avenue
White Plains, NY 10605
T: 914-935-8820

Posen Architects, LLC
NY Cert. 80883
NJ Cert. 21AC000035700
FL Cert. L21000472677

Dennis A. Posen, AIA
NY Lic. 015026-1
NJ Lic. 21AI00808700
FL Lic. AR101678

Kosta Koulouris, AIA
NY Lic. 034846-1
NJ Lic. 21AI01893200

Thomas A. Fantacone, AIA
NY Lic. 035897-1
NJ Lic. 21AI00792500

William S. Hamilton, AIA
NY Lic. 030718-1
NJ Lic. 21AI01380200

Renata S. Mayhew, AIA
NY Lic. 044597-01

www.posen.com
Copyright © 2025

Issuance / Revision

No.	Date	Description

Client:

MONTCLAIRE STATE UNIVERSITY
45 CLOVE ROAD
LITTLE FALLS, NJ 07424

Project:

THE VILLAGE:
WILLIAMS HALL KITCHEN RENOVATIONS
MSU PROJECT # PR25C020

Seal:

Posen Project No.: Z5100

Submission: ISSUED FOR BID

Drawing: FIFTH FLOOR REMOVALS PLAN

Drawn By:	Checked By:	Date:
YA	TF	09.16.2025
Scale:	**Dwg No.Issue No.:**	**Drawing:**
1/8" = 1'-0"	D-105.00	7 of 14

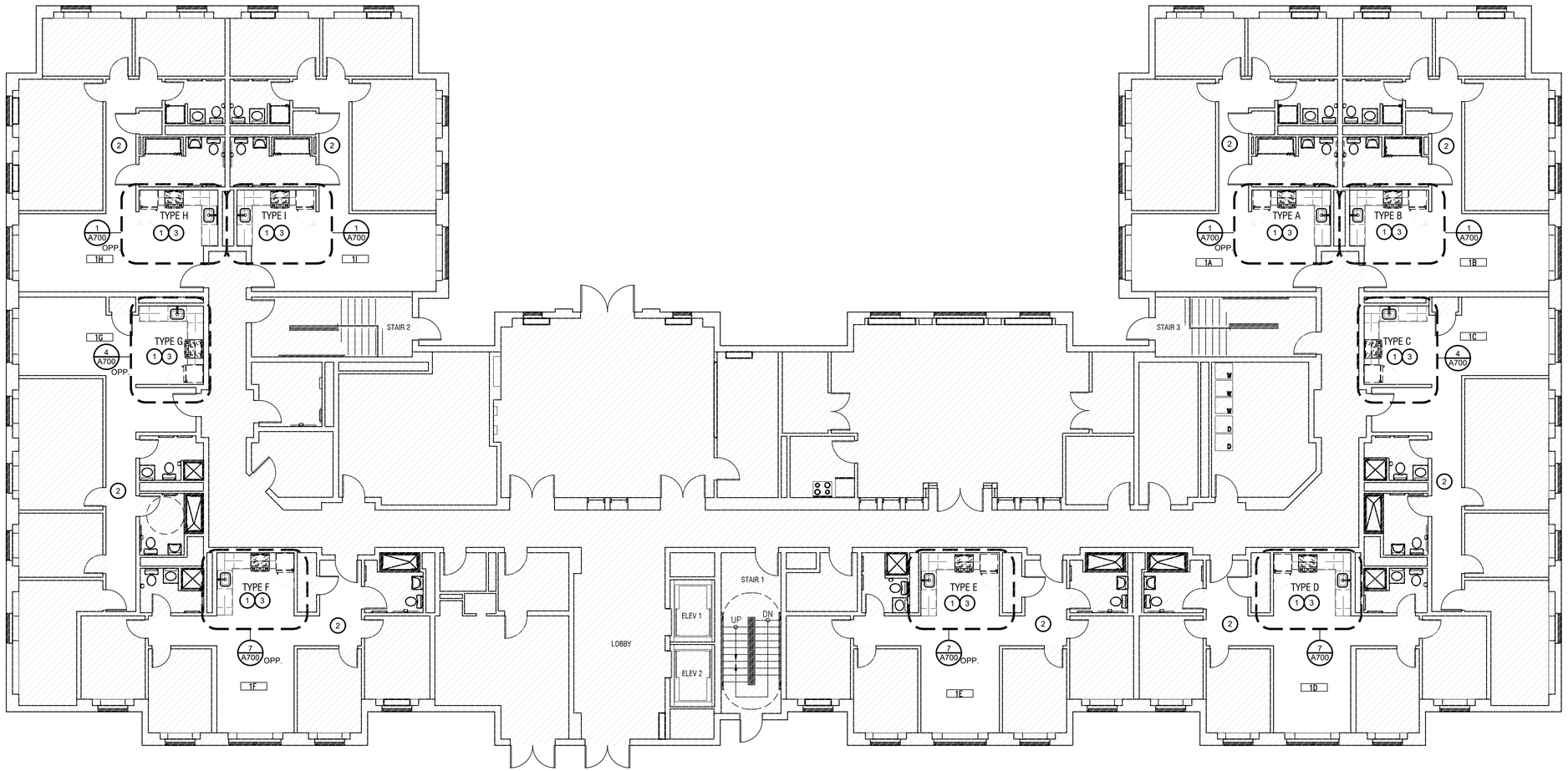

1 FIRST FLOOR PLAN
1/8"= 1'-0"

CONSTRUCTION NOTES

1. REFER TO A700 FOR FINISHES INFORMATION.

KEY NOTES

1. INSTALL NEW CABINETS, COUNTER TOPS AND APPLIANCES. COORDINATE WALL BLOCKING & POWER AS REQUIRED.
2. INSTALL FA-1 TRANSITION STRIPS BELOW DOORS TO COMMON CORRIDOR & BEDROOMS.
3. PAINT ALL WALLS WITHIN KITCHEN EXTENTS AND IN COMMON SPACES WHERE FLOORING IS BEING REPLACED.

POSEN ARCHITECTS

POSEN ARCHITECTS, LLC
Architecture•Interiors•Planning•Regulatory Approvals

NJ:
25 Columbia Street
West Orange, NJ 07052
T: 973-325-3250

NY:
222 Mamaroneck Avenue
White Plains, NY 10605
T: 914-935-8820

Posen Architects, LLC
NY Cert. 80883
NJ Cert. 21AC00035700
FL Cert. L21000472677

Dennis A. Posen, AIA
NY Lic. 015026-1
NJ Lic. 21AI00808700
FL Lic. AR101678

Kosta Koulouris, AIA
NY Lic. 034846-1
NJ Lic. 21AI01893200

Thomas A. Fantacone, AIA
NY Lic. 035897-1
NJ Lic. 21AI00792500

William S. Hamilton, AIA
NY Lic. 030718-1
NJ Lic. 21AI01380200

Renata S. Mayhew, AIA
NY Lic. 044597-01

www.posen.com
Copyright © 2025

Issuance / Revision

No.	Date	Description

Client:
MONTCLAIRE STATE UNIVERSITY
45 CLOVE ROAD
LITTLE FALLS, NJ 07424

Project:
THE VILLAGE:
WILLIAMS HALL KITCHEN RENOVATIONS
MSU PROJECT # PR25C020

Seal:

Posen Project No.: 25100

Submission: ISSUED FOR BID

Drawing: FIRST FLOOR CONSTRUCTION PLAN

Drawn By:	Checked By:	Date:
YA	TF	09.16.2025
Scale:	**Dwg No.Issue No.:**	**Drawing:**
1/8" = 1'-0"	A-101.00	8 of 14

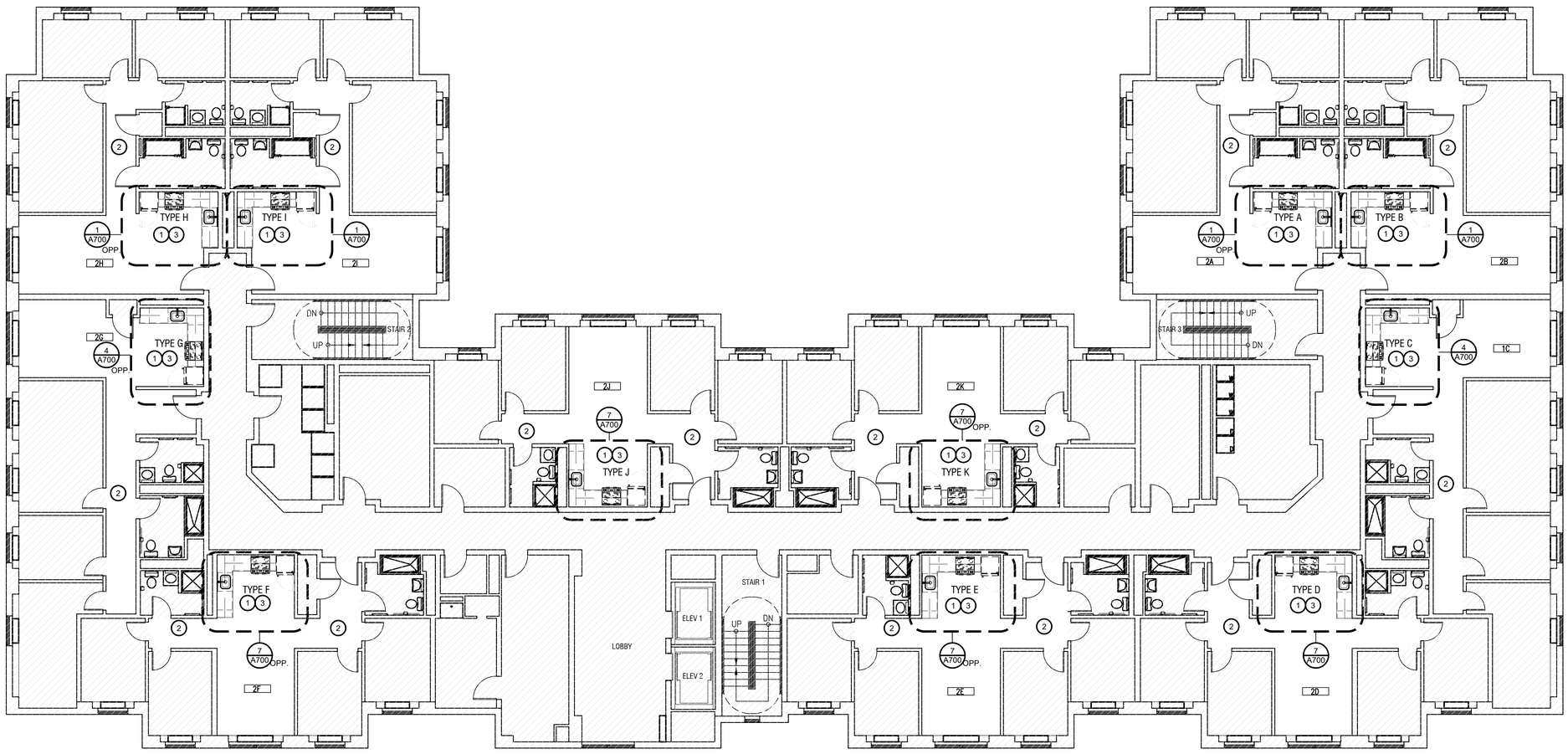

1 SECOND FLOOR
1/8" = 1'

CONSTRUCTION NOTES

1. REFER TO A700 FOR FINISHES INFORMATION.

KEY NOTES

1. INSTALL NEW CABINETS, COUNTER TOPS AND APPLIANCES. COORDINATE WALL BLOCKING & POWER AS REQUIRED.
2. INSTALL FA-1 TRANSITION STRIPS BELOW DOORS TO COMMON CORRIDOR & BEDROOMS.
3. PAINT ALL WALLS WITHIN KITCHEN EXTENTS AND IN COMMON SPACES WHERE FLOORING IS BEING REPLACED.

POSEN ARCHITECTS

POSEN ARCHITECTS, LLC
Architecture•Interiors•Planning•Regulatory Approvals

NJ:
25 Columbia Street
West Orange, NJ 07052
T: 973-325-3250

NY:
222 Mamaroneck Avenue
White Plains, NY 10605
T: 914-935-8820

Posen Architects, LLC
NY Cert. 80883
NJ Cert. 21AC00035700
FL Cert. L21000472677

Dennis A. Posen, AIA
NY Lic. 015026-1
NJ Lic. 21AI00808700
FL Lic. AR101678

Kosta Koulouris, AIA
NY Lic. 034846-1
NJ Lic. 21AI01893200

Thomas A. Fantacone, AIA
NY Lic. 035897-1
NJ Lic. 21AI00792500

William S. Hamilton, AIA
NY Lic. 030718-1
NJ Lic. 21AI01380200

Renata S. Mayhew, AIA
NY Lic. 044597-01

www.posen.com

Copyright © 2025

Issuance / Revision

No.	Date	Description

Client:

MONTCLAIRE STATE UNIVERSITY
45 CLOVE ROAD
LITTLE FALLS, NJ 07424

Project:

THE VILLAGE:
WILLIAMS HALL KITCHEN RENOVATIONS
MSU PROJECT # PR25C020

Seal:

Posen Project No.: 25100

Submission: ISSUED FOR BID

Drawing: SECOND FLOOR CONSTRUCTION PLAN

Drawn By:	Checked By:	Date:
YA	TF	09.16.2025
Scale:	**Dwg No.Issue No.:**	**Drawing:**
1/8" = 1'-0"	A-102.00	9 of 14

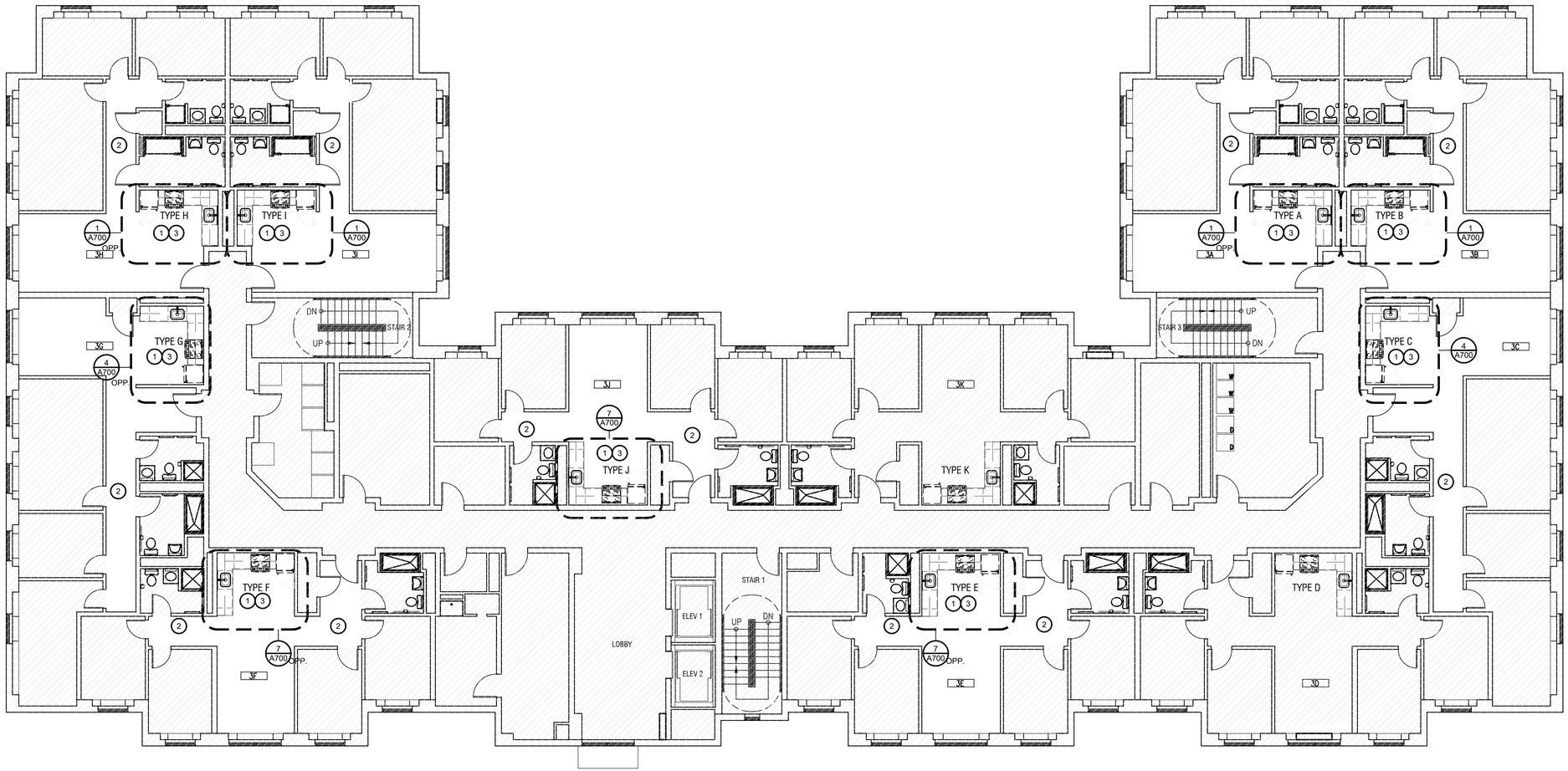

1 THIRD FLOOR PLAN
1/8" = 1'-0"

CONSTRUCTION NOTES

1. REFER TO A700 FOR FINISHES INFORMATION.

KEY NOTES

1. INSTALL NEW CABINETS, COUNTER TOPS AND APPLIANCES. COORDINATE WALL BLOCKING & POWER AS REQUIRED.
2. INSTALL FA-1 TRANSITION STRIPS BELOW DOORS TO COMMON CORRIDOR & BEDROOMS.
3. PAINT ALL WALLS WITHIN KITCHEN EXTENTS AND IN COMMON SPACES WHERE FLOORING IS BEING REPLACED.

POSEN ARCHITECTS

POSEN ARCHITECTS, LLC
Architecture•Interiors•Planning•Regulatory Approvals

NJ:
25 Columbia Street
West Orange, NJ 07052
T: 973-325-3250

NY:
222 Mamaroneck Avenue
White Plains, NY 10605
T: 914-935-8820

Posen Architects, LLC
NY Cert. 80883
NJ Cert. 21AC00035700
FL Cert. L21000472677

Dennis A. Posen, AIA
NY Lic. 015026-1
NJ Lic. 21AI00808700
FL Lic. AR101678

Kosta Koulouris, AIA
NY Lic. 034846-1
NJ Lic. 21AI01893200

Thomas A. Fantacone, AIA
NY Lic. 035897-1
NJ Lic. 21AI00792500

William S. Hamilton, AIA
NY Lic. 030718-1
NJ Lic. 21AI01380200

Renata S. Mayhew, AIA
NY Lic. 044597-01

www.posen.com

Copyright © 2025

Issuance / Revision

No.	Date	Description

Client:

MONTCLAIRE STATE UNIVERSITY
45 CLOVE ROAD
LITTLE FALLS, NJ 07424

Project:

THE VILLAGE:
WILLIAMS HALL KITCHEN RENOVATIONS
MSU PROJECT # PR25C020

Seal:

Posen Project No.: Z5100

Submission: ISSUED FOR BID

Drawing: THIRD FLOOR CONSTRUCTION PLAN

Drawn By:	Checked By:	Date:
YA	TF	09.16.2025
Scale:	**Dwg No.Issue No.:**	**Drawing:**
1/8" = 1'-0"	A-103.00	10 of 14

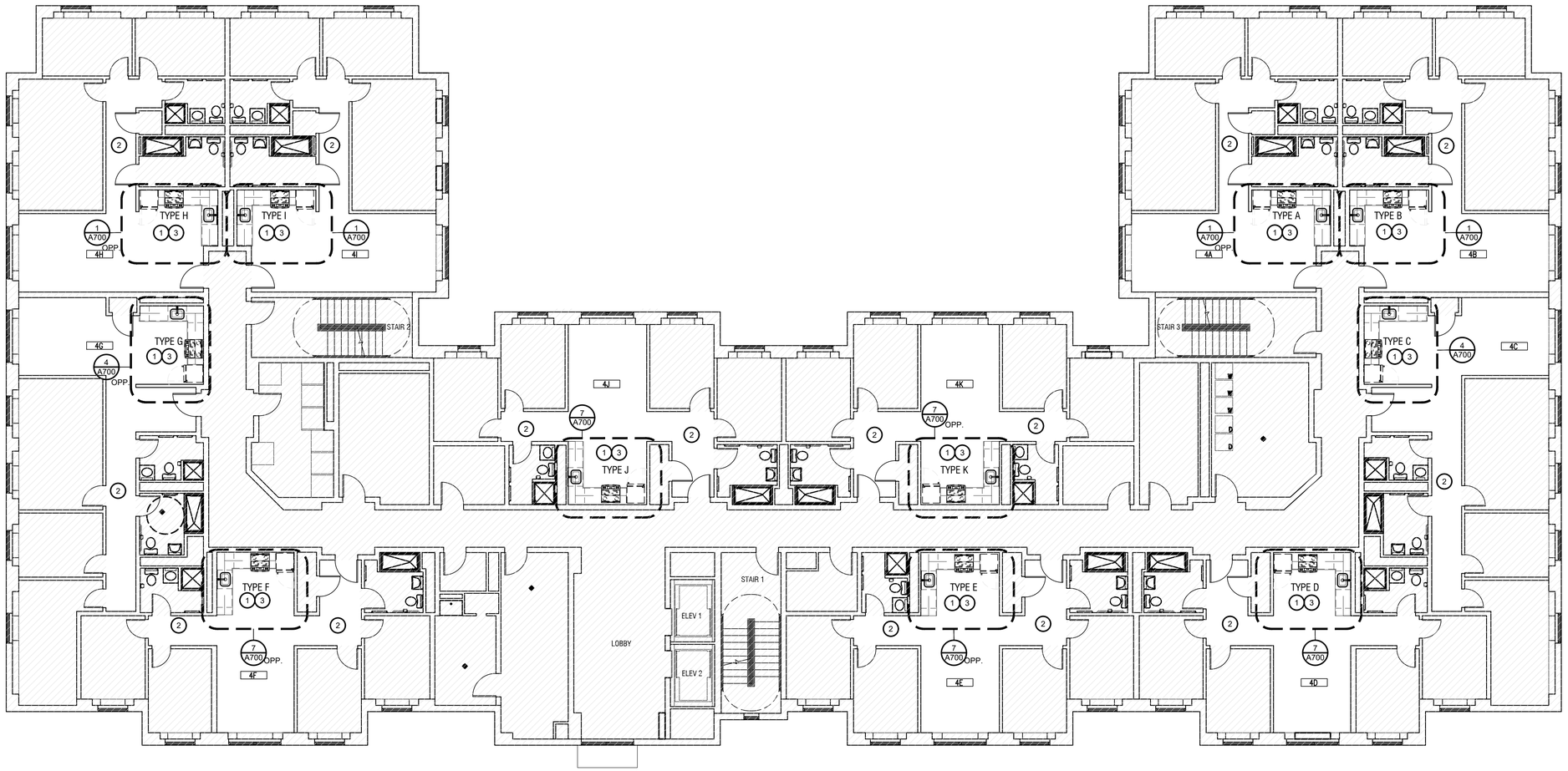

1 FOURTH FLOOR PLAN
1/8"= 1'-0"

CONSTRUCTION NOTES

1. REFER TO A700 FOR FINISHES INFORMATION.

KEY NOTES

1. INSTALL NEW CABINETS, COUNTER TOPS AND APPLIANCES. COORDINATE WALL BLOCKING & POWER AS REQUIRED.
2. INSTALL FA-1 TRANSITION STRIPS BELOW DOORS TO COMMON CORRIDOR & BEDROOMS.
3. PAINT ALL WALLS WITHIN KITCHEN EXTENTS AND IN COMMON SPACES WHERE FLOORING IS BEING REPLACED.

POSEN ARCHITECTS

POSEN ARCHITECTS, LLC
Architecture•Interiors•Planning•Regulatory Approvals

NJ:
25 Columbia Street
West Orange, NJ 07052
T: 973-325-3250

NY:
222 Mamaroneck Avenue
White Plains, NY 10605
T: 914-935-8820

Posen Architects, LLC
NY Cert. 80883
NJ Cert. 21AC00035700
FL Cert. L21000472677

Dennis A. Posen, AIA
NY Lic. 015026-1
NJ Lic. 21AI00808700
FL Lic. AR101678

Kosta Koulouris, AIA
NY Lic. 034846-1
NJ Lic. 21AI01893200

Thomas A. Fantacone, AIA
NY Lic. 035897-1
NJ Lic. 21AI00792500

William S. Hamilton, AIA
NY Lic. 030718-1
NJ Lic. 21AI01380200

Renata S. Mayhew, AIA
NY Lic. 044597-01

www.posen.com
Copyright © 2025

Issuance / Revision

No.	Date	Description

Client:

MONTCLAIRE STATE UNIVERSITY
45 CLOVE ROAD
LITTLE FALLS, NJ 07424

Project:

THE VILLAGE:
WILLIAMS HALL KITCHEN RENOVATIONS
MSU PROJECT # PR25C020

Seal:

Posen Project No.: Z5100

Submission: ISSUED FOR BID

Drawing: FOURTH FLOOR CONSTRUCTION PLAN

Drawn By:	Checked By:	Date:
YA	TF	09.16.2025
Scale:	**Dwg No.Issue No.:**	**Drawing:**
1/8" = 1'-0"	A-104.00	11 of 14

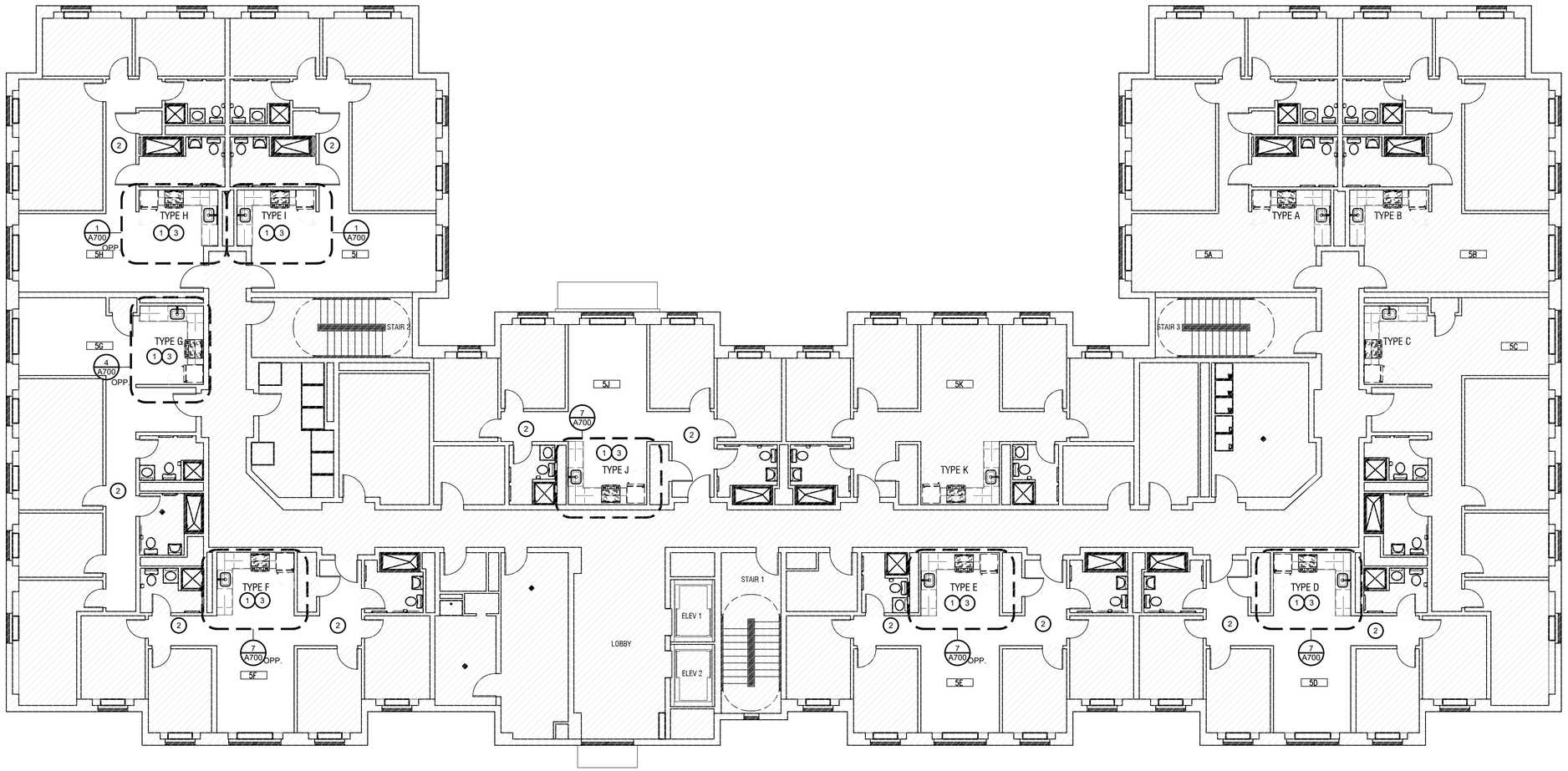

1 FIFTH FLOOR PLAN
1/8"= 1'-0"

CONSTRUCTION NOTES

1. REFER TO A700 FOR FINISHES INFORMATION.

KEY NOTES

1. INSTALL NEW CABINETS, COUNTER TOPS AND APPLIANCES. COORDINATE WALL BLOCKING & POWER AS REQUIRED.
2. INSTALL FA-1 TRANSITION STRIPS BELOW DOORS TO COMMON CORRIDOR & BEDROOMS.
3. PAINT ALL WALLS WITHIN KITCHEN EXTENTS AND IN COMMON SPACES WHERE FLOORING IS BEING REPLACED.

POSEN ARCHITECTS

POSEN ARCHITECTS, LLC
Architecture•Interiors•Planning•Regulatory Approvals

NJ:
25 Columbia Street
West Orange, NJ 07052
T: 973-325-3250

NY:
222 Mamaroneck Avenue
White Plains, NY 10605
T: 914-935-8820

Posen Architects, LLC
NY Cert. 80883
NJ Cert. 21AC00035700
FL Cert. L21000472677

Dennis A. Posen, AIA
NY Lic. 015026-1
NJ Lic. 21AI00808700
FL Lic. AR101678

Kosta Koulouris, AIA
NY Lic. 034846-1
NJ Lic. 21AI01893200

Thomas A. Fantacone, AIA
NY Lic. 035897-1
NJ Lic. 21AI00792500

William S. Hamilton, AIA
NY Lic. 030718-1
NJ Lic. 21AI01380200

Renata S. Mayhew, AIA
NY Lic. 044597-01

www.posen.com

Copyright © 2025

Issuance / Revision

No.	Date	Description

Client:

MONTCLAIRE STATE UNIVERSITY
45 CLOVE ROAD
LITTLE FALLS, NJ 07424

Project:

THE VILLAGE:
WILLIAMS HALL KITCHEN RENOVATIONS
MSU PROJECT # PR25C020

Seal:

Posen Project No.: Z5100

Submission: ISSUED FOR BID

Drawing: FIFTH FLOOR CONSTRUCTION PLAN

Drawn By:	Checked By:	Date:
YA	TF	09.16.2025
Scale:	**Dwg No.Issue No.:**	**Drawing:**
1/8" = 1'-0"	A-105.00	12 of 14

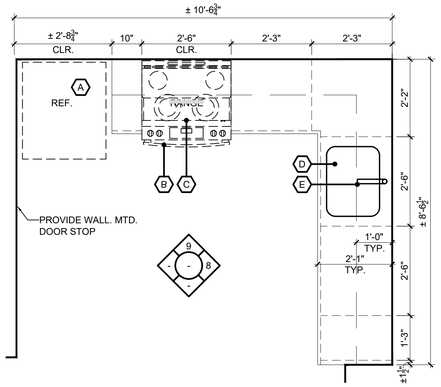

7 ENLARGED KITCHEN PLAN TYP @ D, J UNITS
1/2" = 1'
E, F, K - OPPOSITE

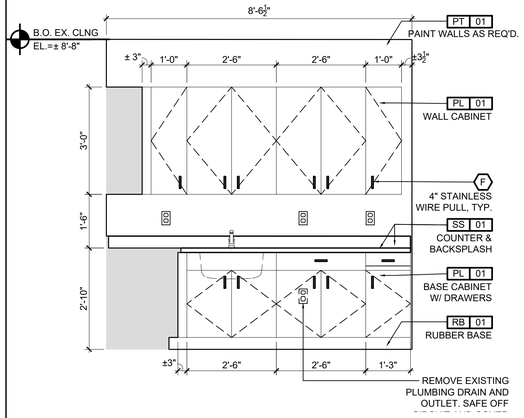

8 ENLARGED KITCHEN ELEVATION TYP. @ D, J UNITS
1/2" = 1'
E, F, K - OPPOSITE

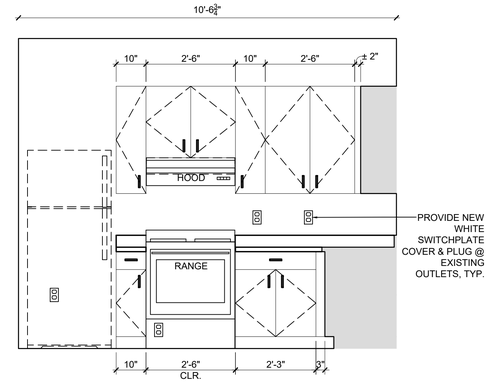

9 ENLARGED KITCHEN ELEVATION TYP. @ D, J UNITS
1/2" = 1'
E, F, K - OPPOSITE

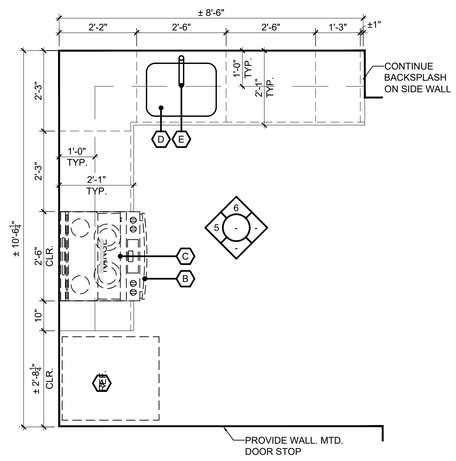

4 ENLARGED KITCHEN PLAN TYP @ C UNITS
1/2" = 1'
G - OPPOSITE

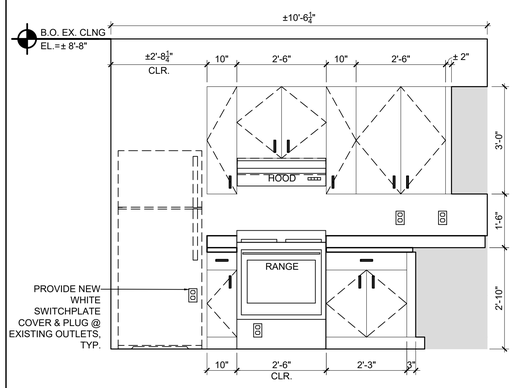

5 ENLARGED KITCHEN ELEVATION TYP. @ C UNITS
1/2" = 1'
G - OPPOSITE

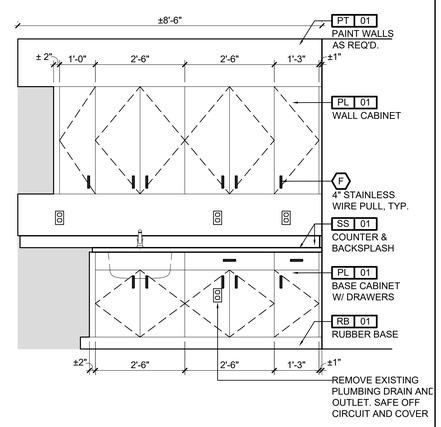

6 ENLARGED KITCHEN ELEVATION TYP. @ C UNITS
1/2" = 1'
G - OPPOSITE

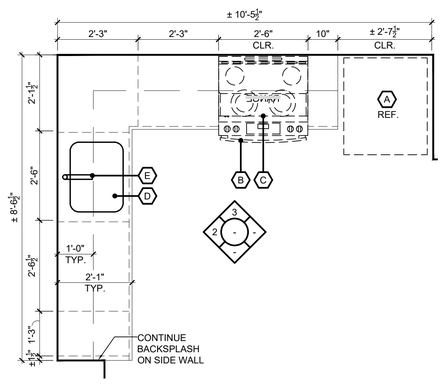

1 ENLARGED KITCHEN PLAN TYP @ B, I UNITS
1/2" = 1'
A,H - OPPOSITE

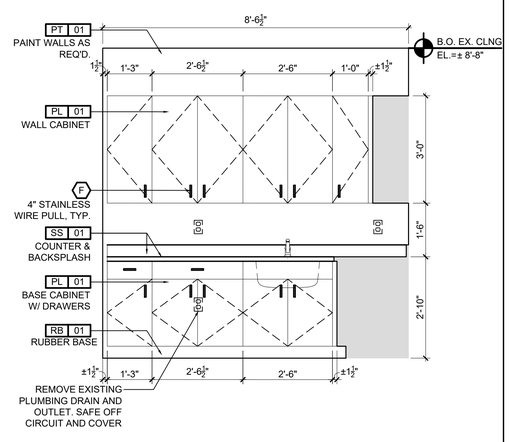

2 ENLARGED KITCHEN ELEVATION TYP. @ B, I UNITS
1/2" = 1'
A,H - OPPOSITE

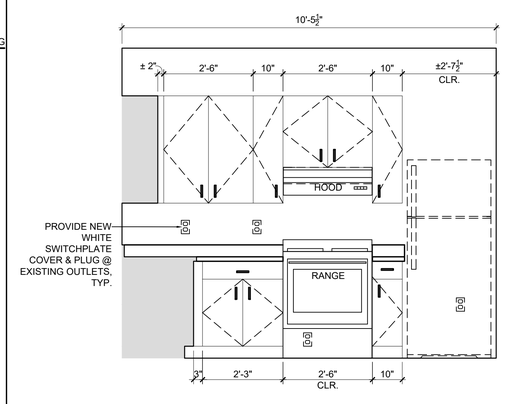

3 ENLARGED KITCHEN ELEVATION TYP. @ B, I UNITS
1/2" = 1'
A, H - OPPOSITE

SCHEDULES & NOTES

APPLIANCE, FIXTURE & ACCESSORY SCHEDULE

TAG	ITEM	QUANT.	MANUF.	MODEL #	FINISH	NOTES
A	TOP FREEZER REFRIGERATOR	47	GE	GTS18GTNWW	WHITE	17.5 CU. FT.
B	RANGE	47	WHIRPOOL	WEE515SALW	WHITE	5.3 CU. FT., 30" WIDE CONNECT ANTI-TIP
C	RECIRCULATING HOOD	47	GE	JVX3300DJWW	WHITE	30" WIDE W/ LIGHT 200 CFM
D	UNDERMOUNT SINK	47	DAYTON	DXUH2115	STAINLESS STL.	23.5" X 18.25" SINGLE BOWL 18 GAUGE
E	SINGLE HANDLE LOW-ARC FAUCET	47	DELTA	COLLINS 141-SS-DST	STAINLESS STL.	ADA COMPLIANT
F	4" WIRE PULL	-	MOCKETT	DP57B	BRUSHED NICKEL	MODERN STYLE

FINISH SCHEDULE

1. PAINTS (ALL PAINT AND PRIMERS SHALL CONTAIN NO VOC'S)

   PT-01= WALL PAINT COLOR TO BE SHERWIN WILLIAMS, DOVER WHITE SW6385.

2. LUXURY VINYL TILE (ALL ADHESIVES SHALL CONTAIN NO VOC'S)

   LVT-01= FORBO FLOORING, ALLURA DRYBACK LVT (FL5) 8" X 48", COLOR: GREY COLLAGE OAK
   ALLURA FLEX LVT (FL5) IS AN ACCEPTABLE ALTERNATE IF MORE READILY IN STOCK.
   REP CONTACT: INVENTIVE FLOORS, FRANK JESCH / 973.650.4780 / FRANKJ@INVENTIVEFLOORS.COM

3. WALL BASE

   RB-01= ROPPE, PINNACLE RUBBER BASE, TYPE: TS- STANDARD TOE, COLOR: 194 BURNT UMBER , SIZE: 4" X ¼" THICK

4. SOLID SURFACE

   SS-01= CAESARSTONE, CLASSICO COLLECTION, COLOR: 2141 BLIZZARD QUARTZ, SIZE: 2 CM, POLISHED FINISH, MITER EDGE PROFILE

5. PLASTIC LAMINATE

   PL-01= WILSONART, STANDARD LAMINATE (HPL), COLOR: 4991-38 PRESSED LINEN, FINE VELVET FINISH

6. FINISH ACCESSORIES

   FA-01= ROPPE, RUBBER ACCESSORIES, TILE/CARPET JOINER, COLOR: 194 BURNT UMBER

7. CABINETS

   PREFABRICATED CABINETS BY FABUWOOD, WOLF OR EQUAL.

GENERAL FINISH NOTES

1. SUBMIT SAMPLES OF ALL ITEMS UNDER " FINISH SCHEDULE" ON THIS SHEET FOR APPROVAL.
2. TRANSITION STRIPS TO OCCUR UNDER CENTER OF DOOR, TYP.
3. AT ALL DOOR THRESHOLDS, AND AT ALL TRANSITIONS BETWEEN FLOOR FINISH MATERIALS OF UN-EQUAL THICKNESS, PROVIDE A SMOOTH AND LEVEL OR BEVELED TRANSITION (NOT TO EXCEED ¾" IN OVERALL HEIGHT) TO MEET THE REQUIREMENTS OF ADA, ICC/ANSI a117.1, AND THE nj BARRIER-FREE SUBCODE.
4. ALL FLOORING TO EXTEND UNDER NEW MILLWORK AND EQUIPMENT.
5. ALL KITCHEN RECEPTACLES ARE CHANGED OUT TO GFI AND TEMPER RESISTANT TYPE.
6. CAULK BACKSPLASH & SIDESPLASH TO ENSURE NO GAPS.
7. COORDINATE REUSE OF EXISTING POWER OUTLETS FOR NEW HOOD, RANGE & REFRIGERATOR (TYPICAL)

POSEN ARCHITECTS

POSEN ARCHITECTS, LLC
Architecture•Interiors•Planning•Regulatory Approvals

NJ:
25 Columbia Street
West Orange, NJ 07052
T: 973-325-3250

NY:
222 Mamaroneck Avenue
White Plains, NY 10605
T: 914-935-8820

Posen Architects, LLC
NY Cert. 80883
NJ Cert. 21AC00035700
FL Cert. L21000472677

Dennis A. Posen, AIA
NY Lic. 015026-1
NJ Lic. 21AI00808700
FL Lic. AR101678

Kosta Koulouris, AIA
NY Lic. 034846-1
NJ Lic. 21AI01893200

Thomas A. Fantacone, AIA
NY Lic. 035897-1
NJ Lic. 21AI00792500

William S. Hamilton, AIA
NY Lic. 030718-1
NJ Lic. 21AI01380200

Renata S. Mayhew, AIA
NY Lic. 044597-01

www.posen.com

Copyright © 2025

Issuance / Revision

No.	Date	Description

Client:
MONTCLAIRE STATE UNIVERSITY
45 CLOVE ROAD
LITTLE FALLS, NJ 07424

Project:
THE VILLAGE:
WILLIAMS HALL KITCHEN RENOVATIONS
MSU PROJECT # PR25C020

Seal:

Posen Project No.: 25100

Submission: ISSUED FOR BID

Drawing: ENLARGED TYP. KITCHEN PLANS & ELEVATIONS

Drawn By:	Checked By:	Date:
YA	TF	09.16.2025
Scale:	**Dwg No.Issue No.:**	**Drawing:**
1/8" = 1'-0"	A-700.00	13 of 14

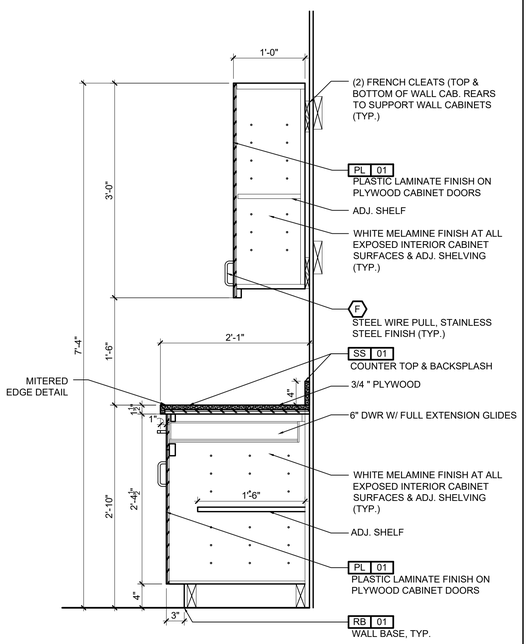

1 MILLWORK SECTION TYP. @ BASE CABINET

1" = 1'

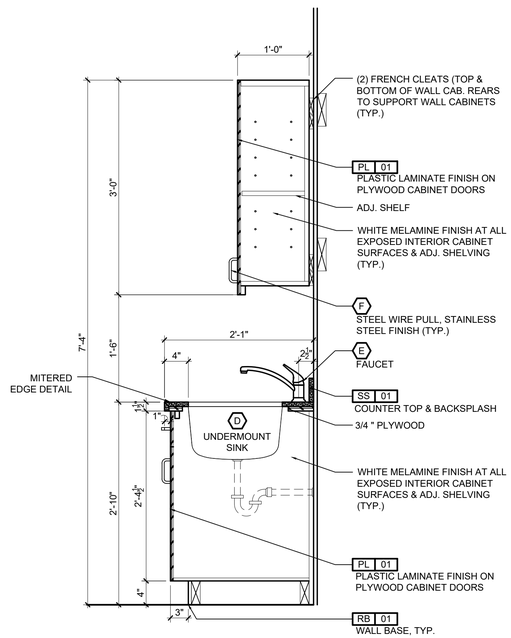

2 MILLWORK SECTION TYP. @ SINK

1" = 1'

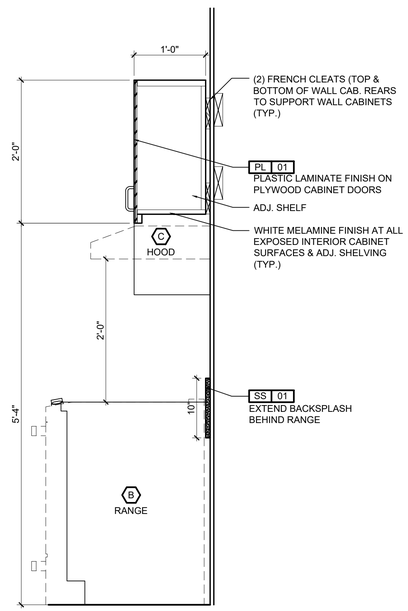

3 MILLWORK SECTION TYP. @ RANGE HOOD

1" = 1'

POSEN ARCHITECTS

POSEN ARCHITECTS, LLC

Architecture•Interiors•Planning•Regulatory Approvals

NJ:
25 Columbia Street
West Orange, NJ 07052
T: 973-325-3250

NY:
222 Mamaroneck Avenue
White Plains, NY 10605
T: 914-935-8820

Posen Architects, LLC
NY Cert. 80883
NJ Cert. 21AC00035700
FL Cert. L21000472677

Dennis A. Posen, AIA
NY Lic. 015026-1
NJ Lic. 21AI00808700
FL Lic. AR101678

Kosta Koulouris, AIA
NY Lic. 034846-1
NJ Lic. 21AI01893200

Thomas A. Fantacone, AIA
NY Lic. 035897-1
NJ Lic. 21AI00792500

William S. Hamilton, AIA
NY Lic. 030718-1
NJ Lic. 21AI01380200

Renata S. Mayhew, AIA
NY Lic. 044597-01

www.posen.com

Copyright © 2025

Issuance / Revision

No.	Date	Description

Client:

MONTCLAIRE STATE UNIVERSITY
45 CLOVE ROAD
LITTLE FALLS, NJ 07424

Project:

THE VILLAGE:
WILLIAMS HALL KITCHEN RENOVATIONS
MSU PROJECT # PR25C020

Seal:

Posen Project No.: 25100

Submission: ISSUED FOR BID

Drawing: TYP. KITCHEN SECTION DETAILS

Drawn By:	Checked By:	Date:
YA	TF	09.16.2025
Scale:	**Dwg No.Issue No.:**	**Drawing:**
1/8" = 1'-0"	A-800.00	14 of 14